GQS 40

Submersible Sewage and Drainage Pumps

PATENTED

Construction

Single-impeller submersible pumps, with free-flow (vortex) impeller with vertical threaded delivery port.
Double mechanical shaft seal with interposed oil chamber, to protect against dry-running.

Applications

For domestic or industrial waste water, dirty water with solids up to 40 mm grain size, for liquids which are compatible with the pump materials.
For draining rooms or or emptying tanks.
Extraction of water from ponds, streams or pits and for rainwater collection.

Operating conditions

Liquid temperature up to 35° C.
pH value: 6-11.
Maximum immersion depth: 5 m.
Minimum immersion depth: 200 mm.
Continuous duty (with submerged motor).

Motor

2-pole induction motor, 50 Hz (n ≈ 2900 rpm).
GQS: three-phase 230 V ± 10%;
three-phase 400 V ± 10%;.
Cable: H07RN-F, 4G1 mm^2, length 10 m, without plug.
GQSM: single-phase 230 V ± 10%,
with float switch and thermal protector.
Incorporated capacitor.
Cable: H07RN-F, 3G1 mm^2, length 10 m, with plug CEI-UNEL 47166.
Insulation class F.
Protection IP X8 (for continuous immersion)
Double impregnation humidity-proof dry winding.
Constructed in accordance with: EN 60034-1;
EN 60335-1, EN 60335-2-41.

Materials

Component	Material
Pump casing	Cast iron GJL 200 EN 1561
Impeller Motor jacket Jacket cover	Chrome-nickel steel 1.4301 EN 10088 (AISI 304)
Handle	Polypropylene (with frame in AISI 304)
Shaft	Chrome-nickel steel 1.4305 EN 10088 (AISI 303)
Mechanical seal	Ceramic alumina/Carbon/NBR
Seal lubrication oil	Oil for food/pharmaceutical machinery

Other features on request

- Other voltages.
- Frequency 60 Hz (as per 60 Hz data sheet).
- Other mechanical seal.
- Cable length 20 m.
- Motor suitable for operation with frequency converter.
- Three-phase pumps with incorporated float switch.

Characteristic curves n ≈ 2900 rpm

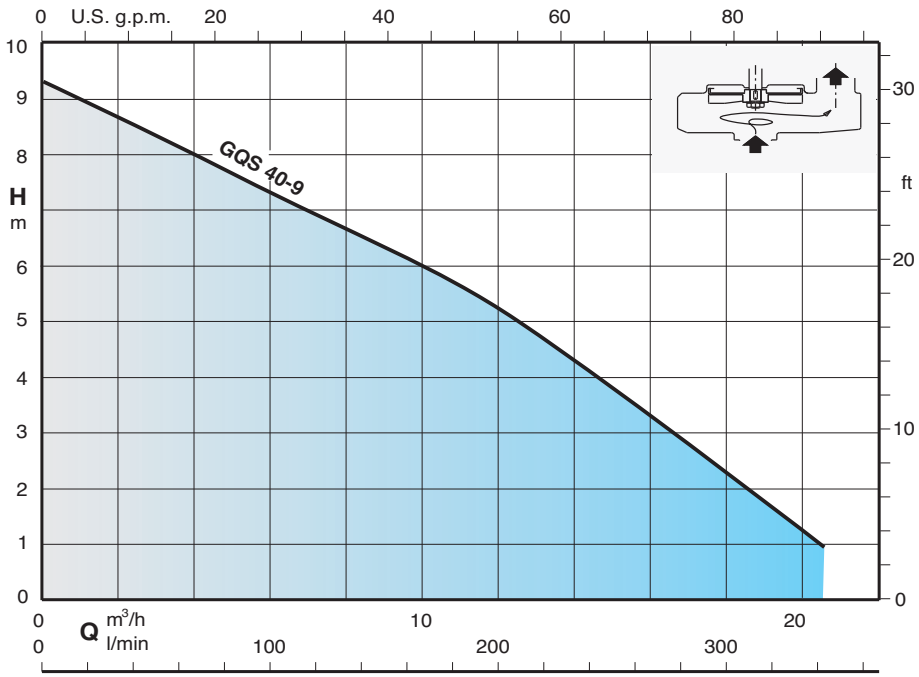

GQS 40

Submersible Sewage and Drainage Pumps

calpeda

Performance n ≈ 2900 rpm

3~	230V 400V		1~	230V	Capacitor		P1	P2		Q m³/h	0	1,5	3	6	9	12	15	18	21	24	27	30	33
	A	A		A	µf	Vc	kW	kW	HP	l/min	0	25	50	100	150	200	250	300	350	400	450	500	550
GQS 40-9	2,8	1,6	**GQSM 40-9**	4,5	20	450	0,95	0,45	0,6	**H** m	9,3	8,8	8,3	7,3	6,3	5,2	3,8	2,3	0,9	-	-	-	-

P1 Max. power input. P2 Rated motor power output. Density ρ = 1000 kg/m³. Kinematic viscosity ν = max 20 mm²/sec.

Dimensions and weights

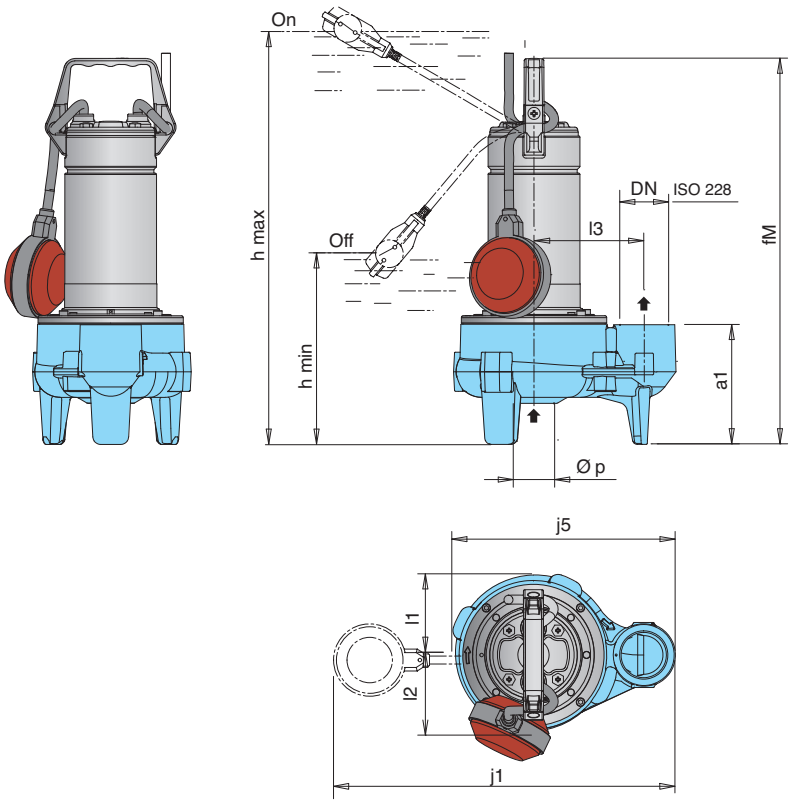

Installation examples

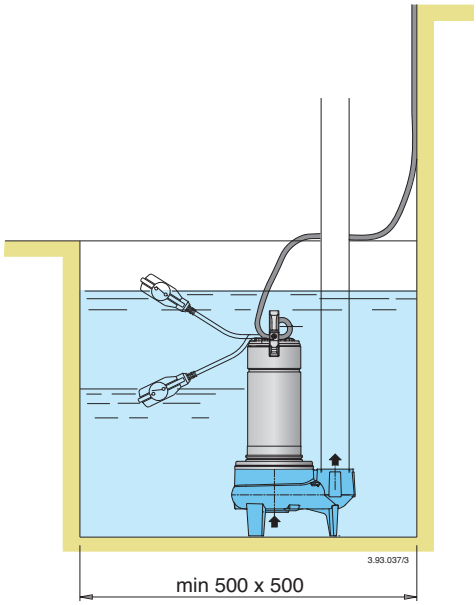

TYPE	DN	mm										kg (1)	
		a1	fM	l1	l2	l3	j5	Ø p	j1	h max	h min	GQS	GQSM
GQS(M) **40-9**	G 1 1/2	120	385	78	81	110	222	40	410	460	200	10,5	10,5

1) With cable length: 10 m

GQS, GQV Submersible Sewage and Drainage Pumps

calpeda

PATENTED

Construction

Single-impeller submersible pumps, with free-flow (vortex) impeller.
GQS: with vertical threaded delivery port (G 2”).
GQV: with horizontal G 2” or G 2”1/2 threaded delivery port and with DN 50 or DN 65 flanged delivery port.
Double mechanical shaft seal with interposed oil chamber, to protect against dry-running.

Applications

For domestic or industrial waste water, dirty water with solids up to 50 mm (65 mm for GQV 65) grain size, for liquids which are compatible with the pump materials.
For draining rooms or or emptying tanks.
Extraction of water from ponds, streams or pits and for rainwater collection.

Operating conditions

Liquid temperature up to 35° C.
pH value: 6-11.
Maximum immersion depth: 5 m.
Minimum immersion depth: 275 mm (355 mm for GQV 65).
Continuous duty (with submerged motor).

Motor

2-pole induction motor, 50 Hz (n ≈ 2900 rpm).
GQV, GQS: three-phase 230 V ± 10%;
three-phase 400 V ± 10%;.
Cable: H07RN-F, 4G1 mm^2, length 10 m, without plug.
GQVM, GQSM: single-phase 230 V ± 10%,
with float switch and thermal protector.
Incorporated capacitor.
Cable: H07RN-F, 3G1 mm^2, length 10 m, with plug CEI-UNEL 47166.
Insulation class F.
Protection IP X8 (for continuous immersion)
Triple impregnation humidity-proof dry winding.
Constructed in accordance with: EN 60034-1;
EN 60335-1, EN 60335-2-41.

Materials

Component	Material
Pump casing Impeller	Cast iron GJL 200 EN 1561
Motor jacket Jacket cover Casing cover	Chrome-nickel steel 1.4301 EN 10088 (AISI 304)
Handle	Polypropylene (with frame in AISI 304)
Shaft	Chrome-nickel steel 1.4301 EN 10088 (AISI 304)
Mechanical seal: upper lower	Ceramic alumina/Carbon/NBR
Seal lubrication oil	Oil for food/pharmaceutical machinery

Other features on request

- Other voltages. - Frequency 60 Hz (as per 60 Hz data sheet).
- Other mechanical seal. - Cable length 20 m.
- Motor suitable for operation with frequency converter.
- Three-phase pumps with incorporated float switch.

Characteristic curves n ≈ 2900 rpm

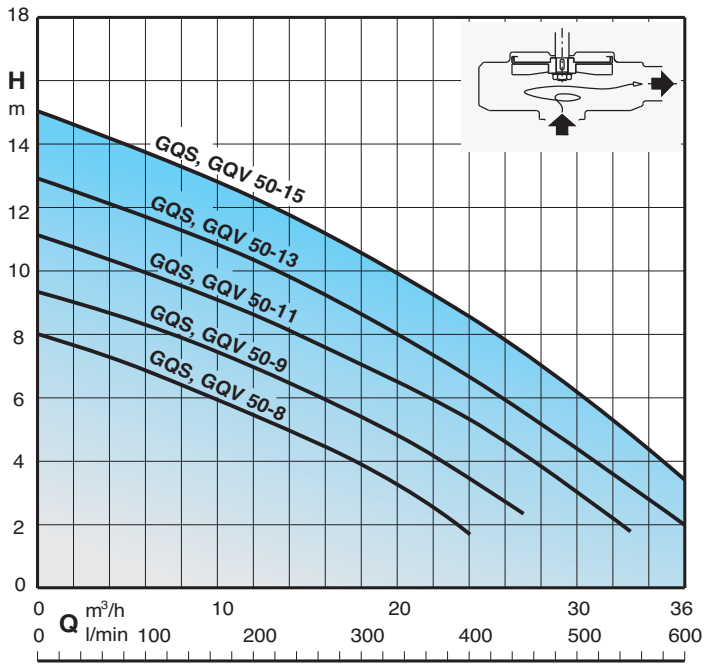

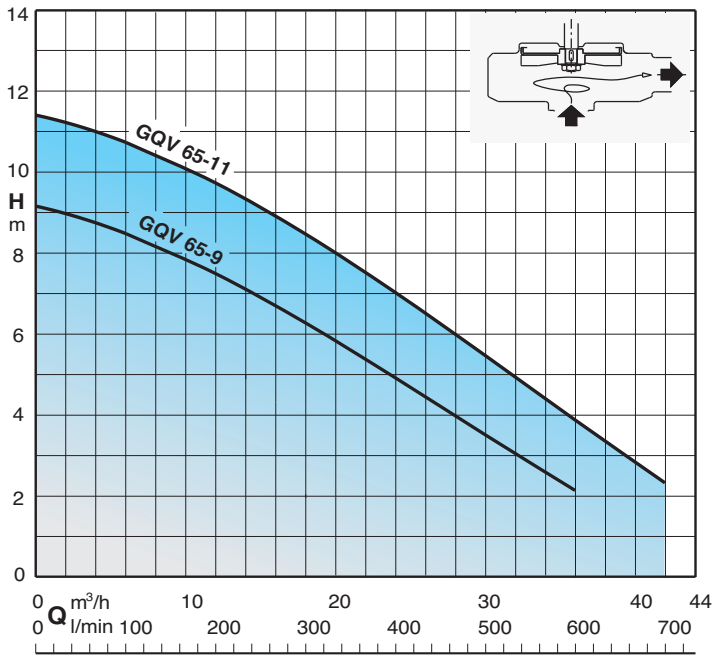

GQS, GQV Submersible Sewage and Drainage Pumps

calpeda

Performance n ≈ 2900 rpm

3~	230V 400V		1~	230V	Capacitor		P1	P2		Q m³/h	0	3	6	9	12	15	18	21	24	27	30	33	36
	A	A		A	µf	Vc	kW	kW	HP	l/min	0	50	100	150	200	250	300	350	400	450	500	550	600
GQS 50-8 **GQV 50-8**	2,6	1,5	**GQSM 50-8** **GQVM 50-8**	4,3	16	450	0,95	0,55	0,75		8	7,4	6,9	6,3	5,6	4,8	4	3	1,8	-	-	-	-
GQS 50-9 **GQV 50-9**	3,1	1,8	**GQSM 50-9** **GQVM 50-9**	4,8	16	450	1,1	0,75	1	**H** m	9,3	8,8	8,3	7,7	7	6,2	5,3	4,3	3,2	2,2	-	-	-
GQS 50-11 **GQV 50-11**	4	2,3	**GQSM 50-11** **GQVM 50-11**	6,6	25	450	1,45	0,9	1,2		11	10,5	10	9,3	8,6	7,8	7	6,2	5,2	4,2	3	1,8	-
GQS 50-13 **GQV 50-13**	5,2	3	**GQSM 50-13** **GQVM 50-13**	8,4	30	450	1,8	1,1	1,5		12,8	12,2	11,6	11	10,3	9,5	8,6	7,7	6,7	5,7	4,5	3,3	2
GQS 50-15 **GQV 50-15**	6,9	4	**GQSM 50-15** **GQVM 50-15**	13	35	450	2,2	1,5	2		15	14,4	13,7	13	12,2	11,3	10,4	9,5	8,5	7,4	6,2	4,8	3,5

3~	230V 400V		1~	230V	Capacitor		P1	P2		Q m³/h	0	6	12	18	24	30	36	42					
	A	A		A	µf	Vc	kW	kW	HP	l/min	0	100	200	300	400	500	600	700					
GQV 65-9	5,2	3	**GQVM 65-9**	8,4	30	450	1,8	1,1	1,5	**H** m	9,1	8,5	7,5	6,3	4,9	3,5	2,1	-					
GQV 65-11	6,9	4	**GQVM 65-11**	13	35	450	2,2	1,5	2		11,4	10,7	9,7	8,5	7	5,5	3,9	2,3					

P1 Max. power input. P2 Rated motor power output. Density ρ = 1000 kg/m³. Kinematic viscosity ν = max 20 mm²/sec.

Dimensions and weights

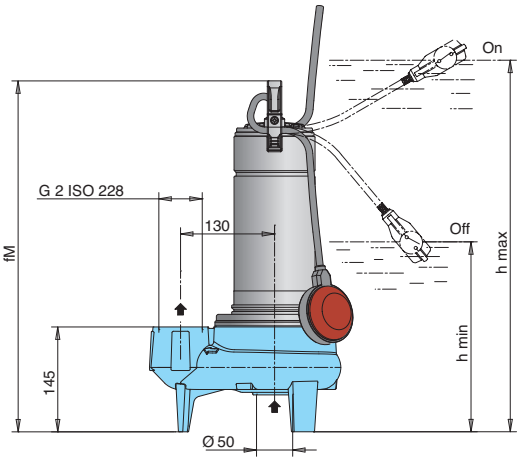

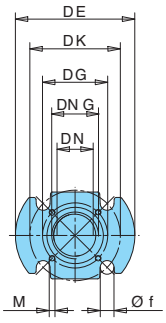

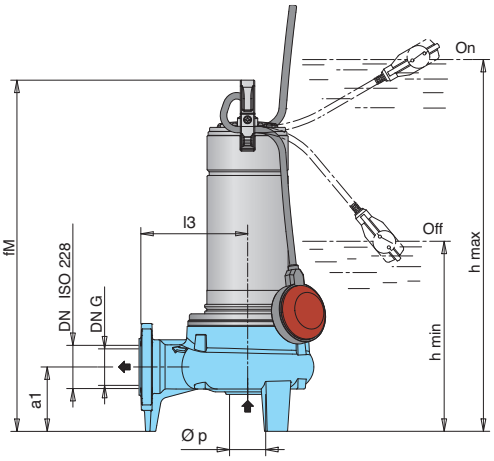

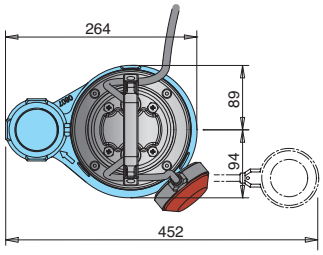

DN	DN G	DE	DK	N.	Ø f	DG	N.	M
50	G 2	165	125	4	19	90	4	M8
65	G 2 1/2	185	145	4	19	118	4	M8

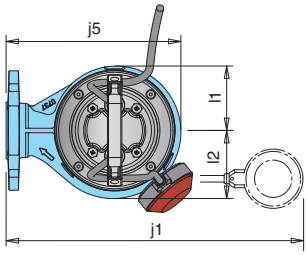

TYPE	mm			kg (1)	
	fM	h max	h min	GQS	GQSM
GQS(M) **50-8**	460	535	275	14,8	15,8
GQS(M) **50-9**	460	535	275	15	16
GQS(M) **50-11**	485	560	300	15,8	17,8
GQS(M) **50-13**	505	580	320	18,8	20,3
GQS 50-15	505	580	320	20,3	-
GQSM 50-15	535	610	350	-	21,8

1) With cable length: 10 m

TYPE	mm											kg (1)	
	DN G	DN	a1	fM	l1	l2	l3	j5	Ø p	j1	h max	h min	GQV	GQVM
GQV(M) **50-8**	G 2	50	90	460	89	94	150	242	50	430	535	275	15	16
GQV(M) **50-9**	G 2	50	90	460	89	94	150	242	50	430	535	275	15,2	16,2
GQV(M) **50-11**	G 2	50	90	485	89	94	150	242	50	430	560	300	16	18
GQV(M) **50-13**	G 2	50	90	505	89	94	150	242	50	430	580	320	19	20,5
GQV 50-15	G 2	50	90	505	89	94	150	242	50	430	580	320	20,5	-
GQVM 50-15	G 2	50	90	535	89	94	150	242	50	430	610	350	-	22
GQV(M) **65-9**	G 2 1/2	65	110	540	100	105	150	253	65	430	615	355	22	23,5
GQV 65-15	G 2 1/2	65	110	540	100	105	150	253	65	430	615	355	23,5	-
GQVM 65-15	G 2 1/2	65	110	570	100	105	150	253	65	430	645	385	-	25

1) With cable length: 10 m

Installation examples

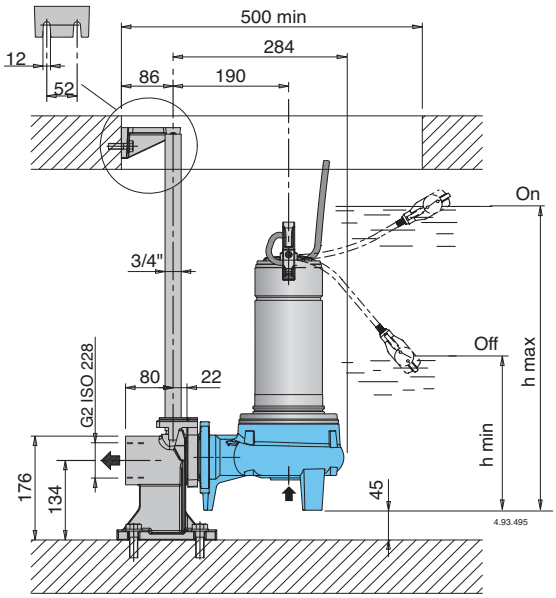

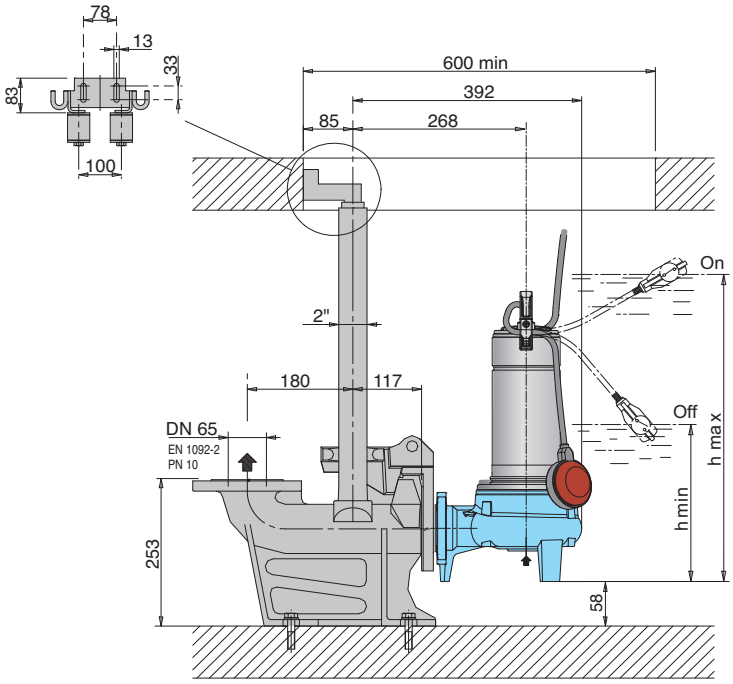

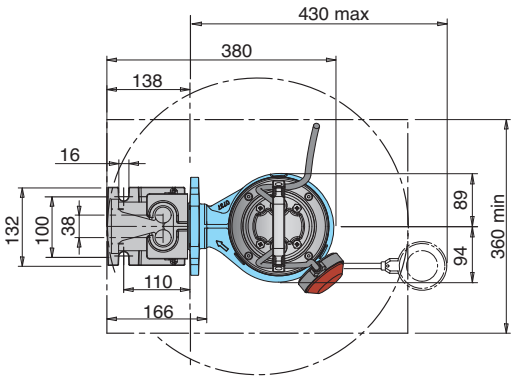

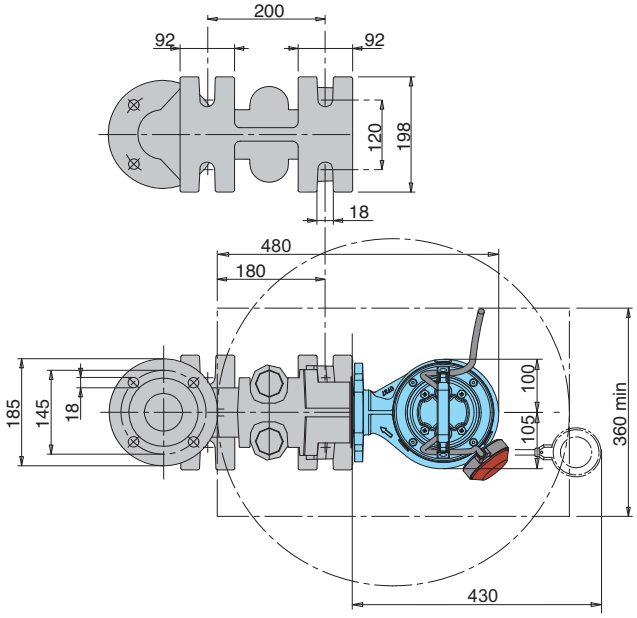

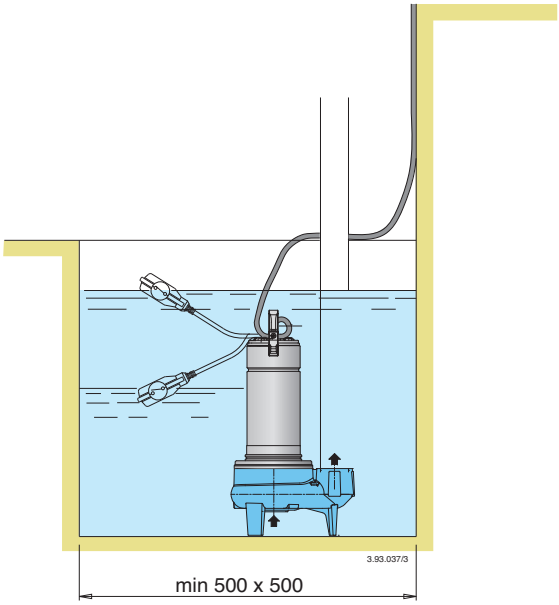

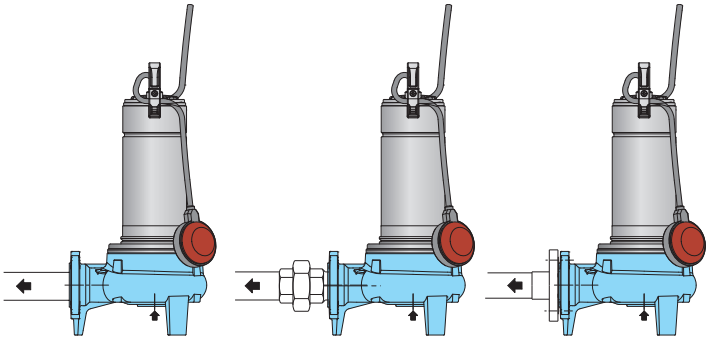

Pump with threaded ports: pipes screwed into the ports

Pump with threaded ports: pipes with union couplings (locally available)

Pump with flanged ports: pipes with counter-flanges

GQS, GQV Submersible Sewage and Drainage Pumps

calpeda

Features

Cable length 10 m, pump single-phase with plug

PATENTED

Handle in polypropylene, with frame in stainless steel.

Easy inspection of the capacitor area.

Easy adjustment of the float switch: to allow the adjustement of start/stop pump levels.

Ring against accidental extraction of the cable.

The double shaft seal with oil chamber separates the motor from the water and provides further protection against accidental operation when dry.

Relief valve: the pump is fitted to a relief valve for air release around the impeller granting a proper pump priming also after long standstill periods.

Chamber with food/pharmaceutical machinery oil

Complete connection flexibility:

- With flanged port for duck foot coupling
- With horizontal threaded delivery port

Impeller with epoxy cataphoresis treatment for a greater protection against the rust.

Shaft in chrome-nickel stainless steel.

The free-fow impeller (vortex) costruction is particulary suitable for liquids containing solids up to 50 mm (65mm for GQV 65) grain size.

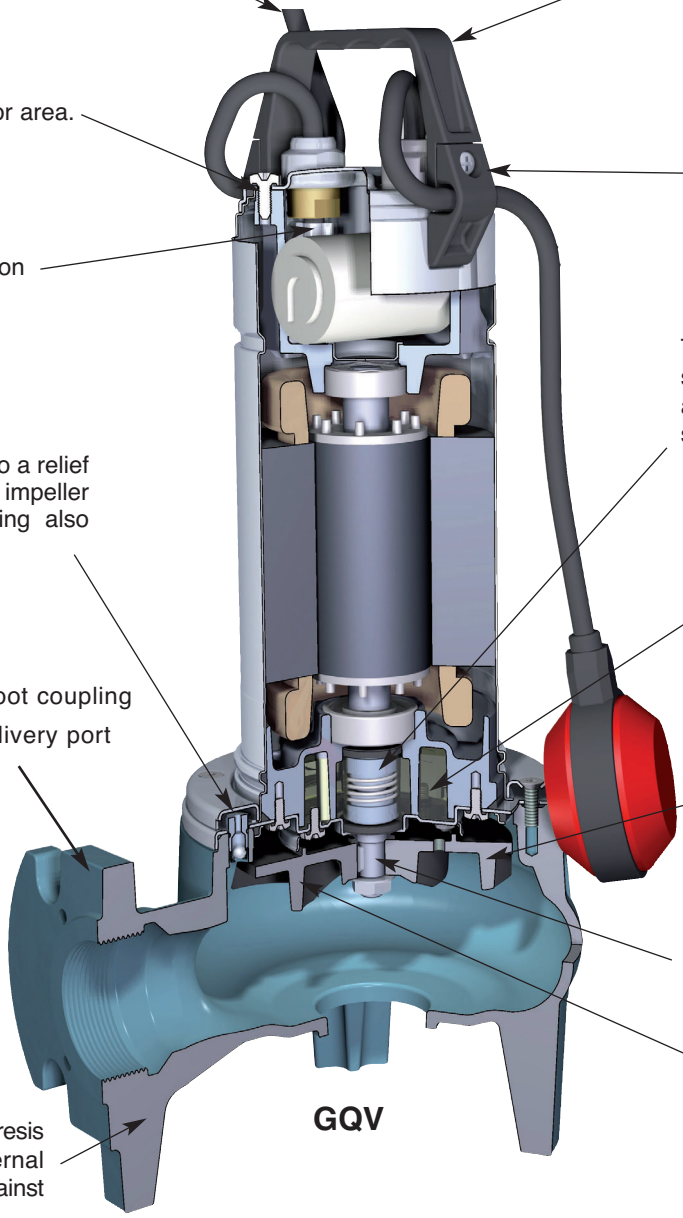

GQV

Pump casing with epoxy cataphoresis treatment joined to the external paint for a greater protection against the rust.

G 2 vertical, upward delivery port for installation in small pits, without the need for an elbow on the pump.

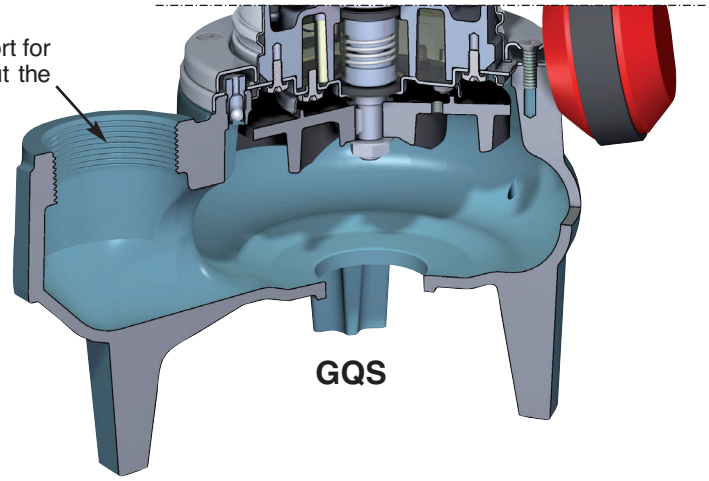

GQS