Boosterkar

EBARA

CONTENTS

50Hz

Rev. I

	Page
- SPECIFICATIONS	**200**
PERFORMANCE RANGE and SELECTION CHART	201
TYPE KEY and CURVE SPECIFICATIONS	202
PERFORMANCE CURVE JEX 80	203
PERFORMANCE CURVE JEX 100	204
PERFORMANCE CURVE JEX 120	205
PERFORMANCE CURVE JEX 150	206
- CONSTRUCTIONS	**300**
SECTIONAL VIEW	300
MECHANICAL SEAL and BEARINGS	301
- DIMENSIONS AND WEIGHT	**400**
PUMP	400
PACKING	401
- TECNICAL DATA	**500**
MOTOR DATA	500
NOISE DATA	500
- INSTALLATION	**600**

SPECIFICATION 50Hz

Rev. I

PUMP			
Liquid Handled	Type of liquid		Clean water
	Temperature	[°C]	min. +5 max. +45
Maximum working pressure		[MPa]	0.6
Maximum suction depth		[m]	8
Construction	Impeller		Closed centrifugal type
	Shaft seal type		Mechanical seal
	Bearing		Sealed ball bearing
Pipe Connection	Suction	[inch]	G 1¼ UNI ISO 228
	Discharge	[inch]	G 1 UNI ISO 228
Material	Casing		AISI 304
	Impeller		AISI 304
	Shaft seal		Ceramic/Carbon/NBR
	Casing cover		AISI 304
	Shaft		AISI 303 (Wet extension)
	Bracket		Aluminium
	Ejector		PPE+PS glass fibre reinforced
	Diffuser		PPE+PS glass fibre reinforced
Applicable standard of test			ISO 9906:2012 – Grade 3B

MOTOR				
Type			Electric - TEFC	
			Single Phase	Three Phase
Efficiency level (Reg. 640/2009)			-	- only for 0.6 kW IE2 from 0.75 kW up to 1.1 kW IE3 from 0.75 kW up to 1.1 kW
No. of Poles			2	
Rotation speed		[min^{-1}]	≈ 2800	
Insulation Class			F	
Protection degree (CEI EN 60034-5)			IP 54 IP 55 (on request)	
Power rating		[kW]	0.6 ÷ 1.1	
		[HP]	0.8 ÷ 1.5	
Frequency		[Hz]	50	
Voltage		[V]	230 ±10%	230/400 ±10%
Capacitor			Built in	-
Over load protection			Built in	Provided by the user
Casing material			Aluminium	
Base material / Motor support			Aluminium	
Dimensions of cable entry			PG11 - PG13.5 - M16x1.5 – M20x1.5 (see dimensions page 400)	

TYPE KEY AND CURVE SPECIFICATIONS

50Hz

Rev. I

PERFORMANCE RANGE

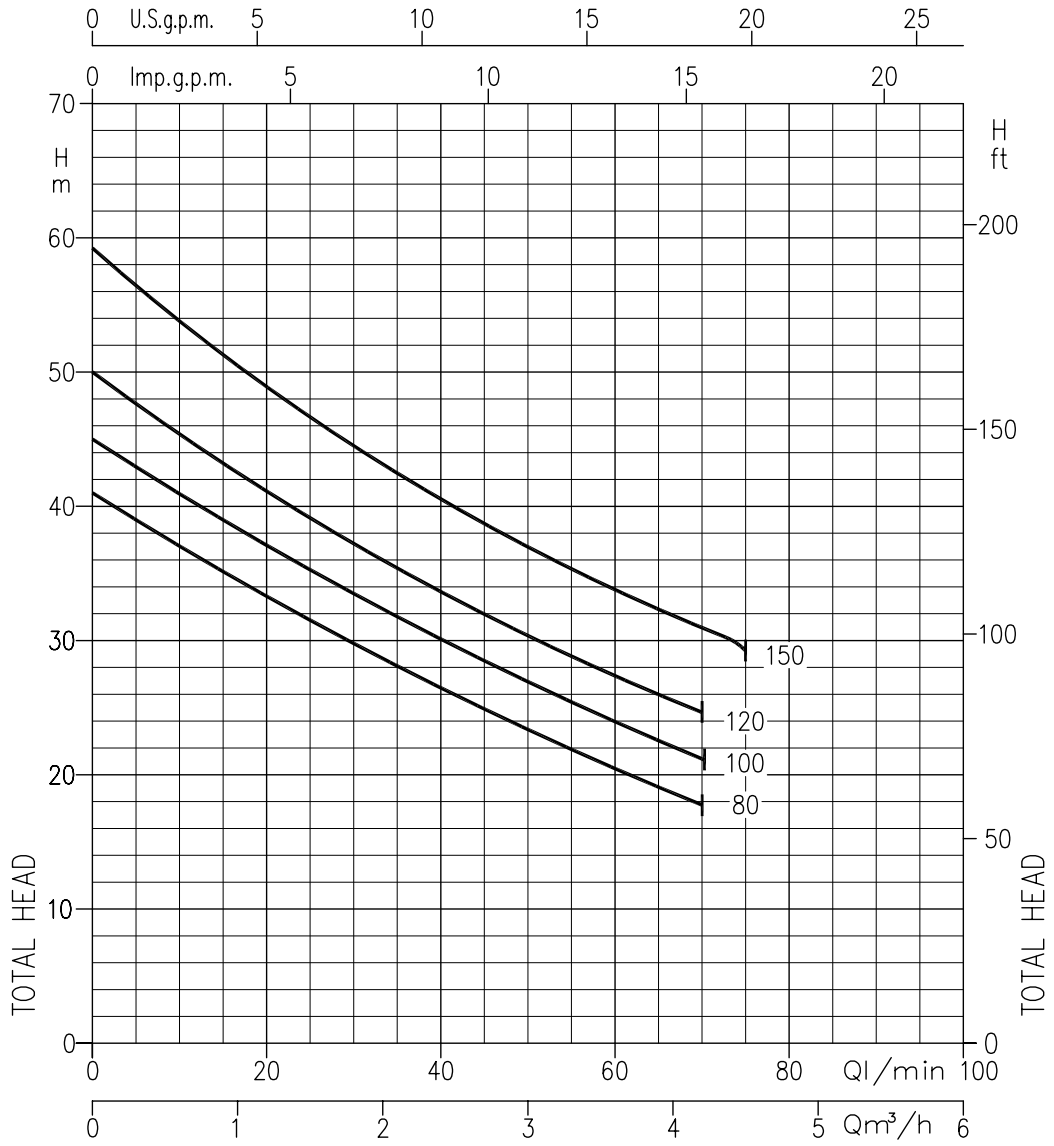

SELECTION CHART

Pump type		Power		Q=Capacity								
Single Phase	Three Phase	[kW]	[HP]	l/min	0	20	30	40	50	60	70	75
				m³/h	0	1.2	1.8	2.4	3	3.6	4.2	4.5
JEXM 80	JEX 80	0.6	0.8		41	33	29	26.5	23.5	20.5	18	-
JEXM 100	JEX 100	0.75	1		45	37	33.5	30	27	24	21	-
JEXM 120	JEX 120	0.88	1.2		50	41	37	34	30.5	27.5	24.5	-
JEXM 150	JEX 150	1.1	1.5		59	49	44.5	40.5	37	34	31	29.5

TYPE KEY AND CURVE SPECIFICATIONS 50Hz

Rev. I

TYPE KEY

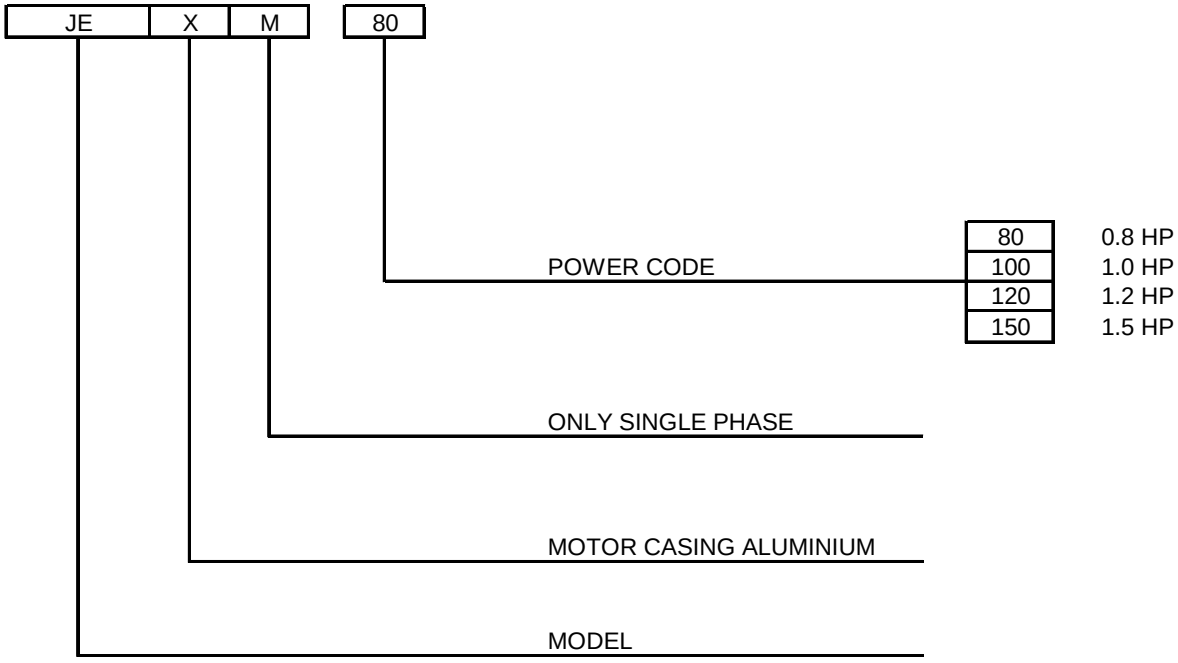

PERFORMANCE CURVE SPECIFICATIONS

The specifications below qualify the curves shown on the following pages.

Tolerances according to ISO 9906:2012 – Grade 3B
The curves refer to effective speed of asynchronous motors at 50 Hz, 2 poles.
Measurements were carried out with clean water at 20℃ of temperature and with a kinematic viscosity of $\nu = 1\ mm^2/s$ (1 cSt)
The continuous curves indicate the recommended working range. The dotted curve is only a guide.
In order to avoid the risk of over-heating, the pumps should not be used at a flow rate below 10% of best efficiency point.

Symbols explanation:

Q = volume flow rate
H = total head

PERFORMANCE CURVE

50Hz

Rev. I

JEX 80 (0.6 kW) - Impeller diameter = 132 mm

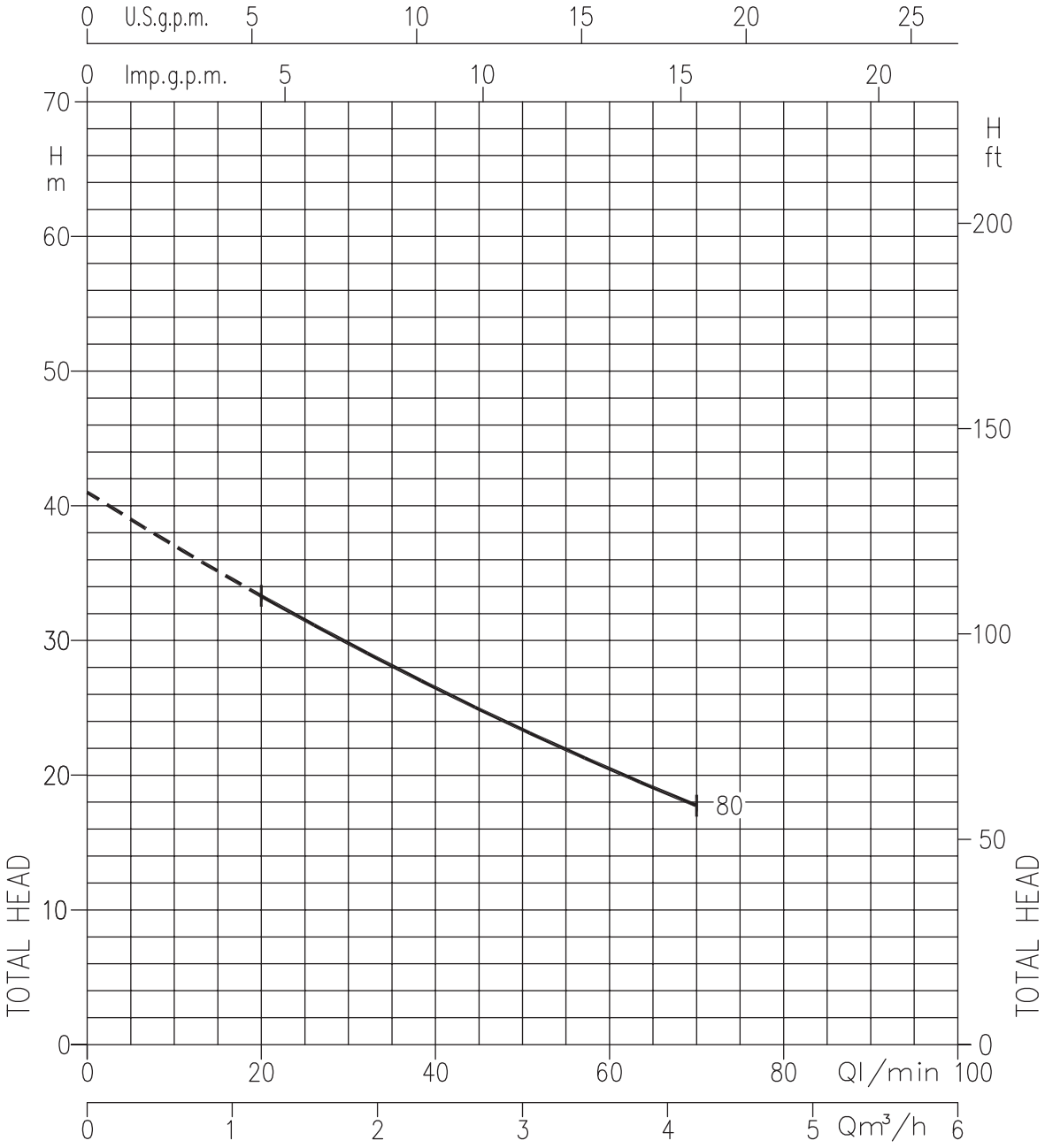

Rotation speed ≈ 2800 min-1
Test standard: ISO 9906:2012 – Grade 3B

PERFORMANCE CURVE

50Hz

Rev. I

JEX 100 (0.75 kW) - Impeller diameter = 141 mm

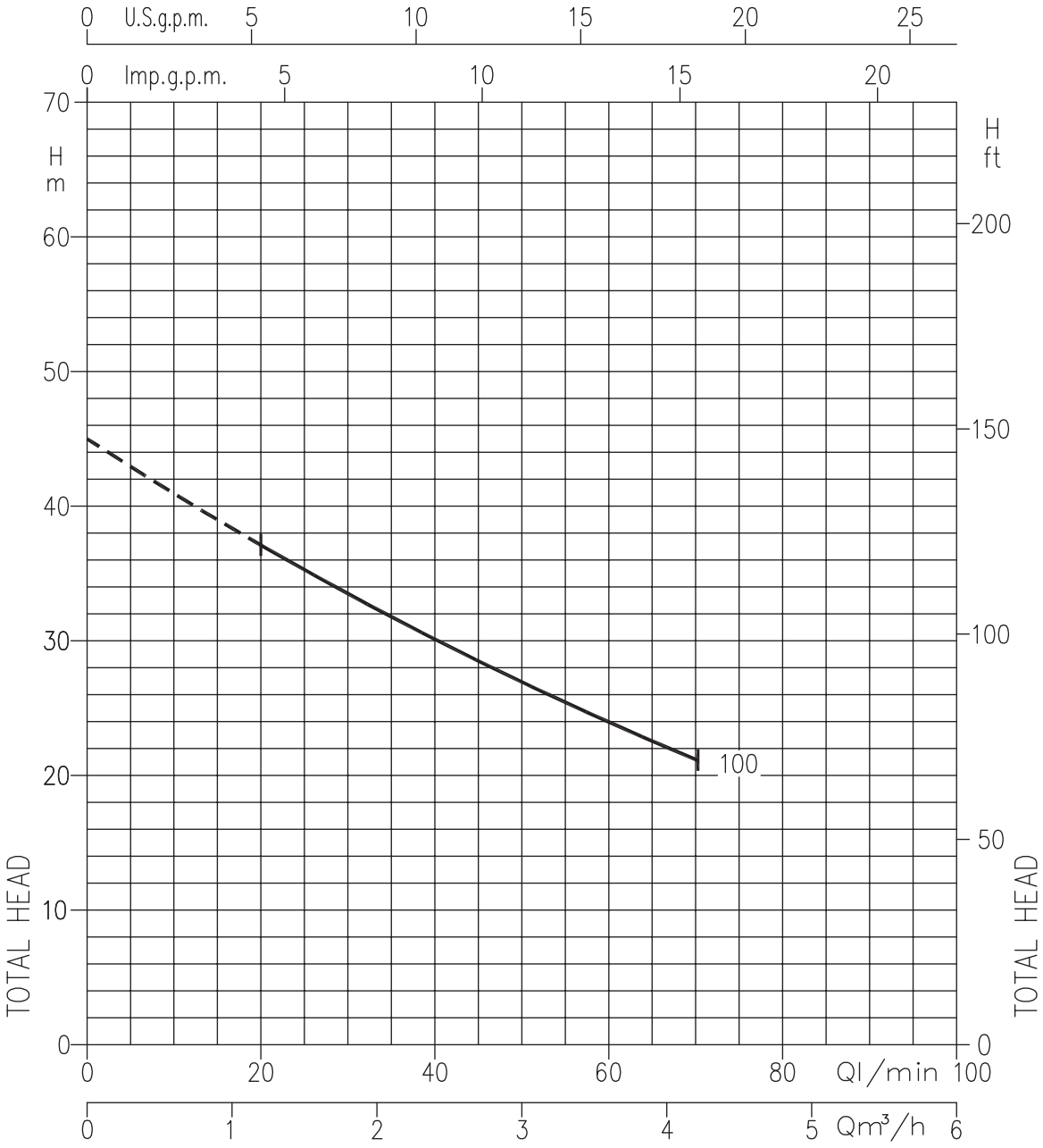

Rotation speed ≈ 2800 min-1
Test standard: ISO 9906:2012 – Grade 3B

PERFORMANCE CURVE

50Hz

Rev. I

JEX 120 (0.88 kW) - Impeller diameter = 141 mm

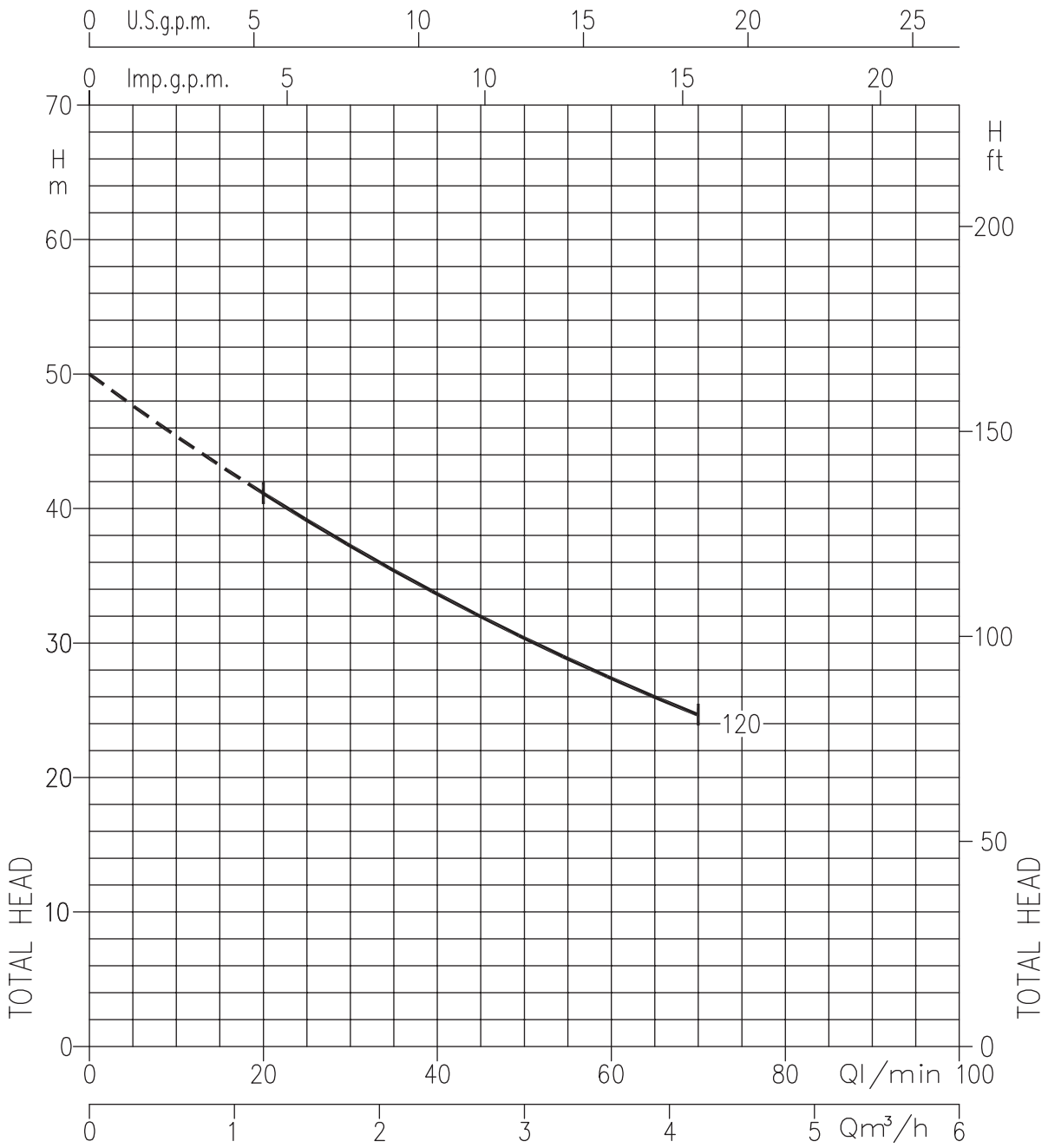

Rotation speed ≈ 2800 min-1
Test standard: ISO 9906:2012 – Grade 3B

PERFORMANCE CURVE

50Hz

Rev. I

JEX 150 (1.1 kW) - Impeller diameter = 141 mm

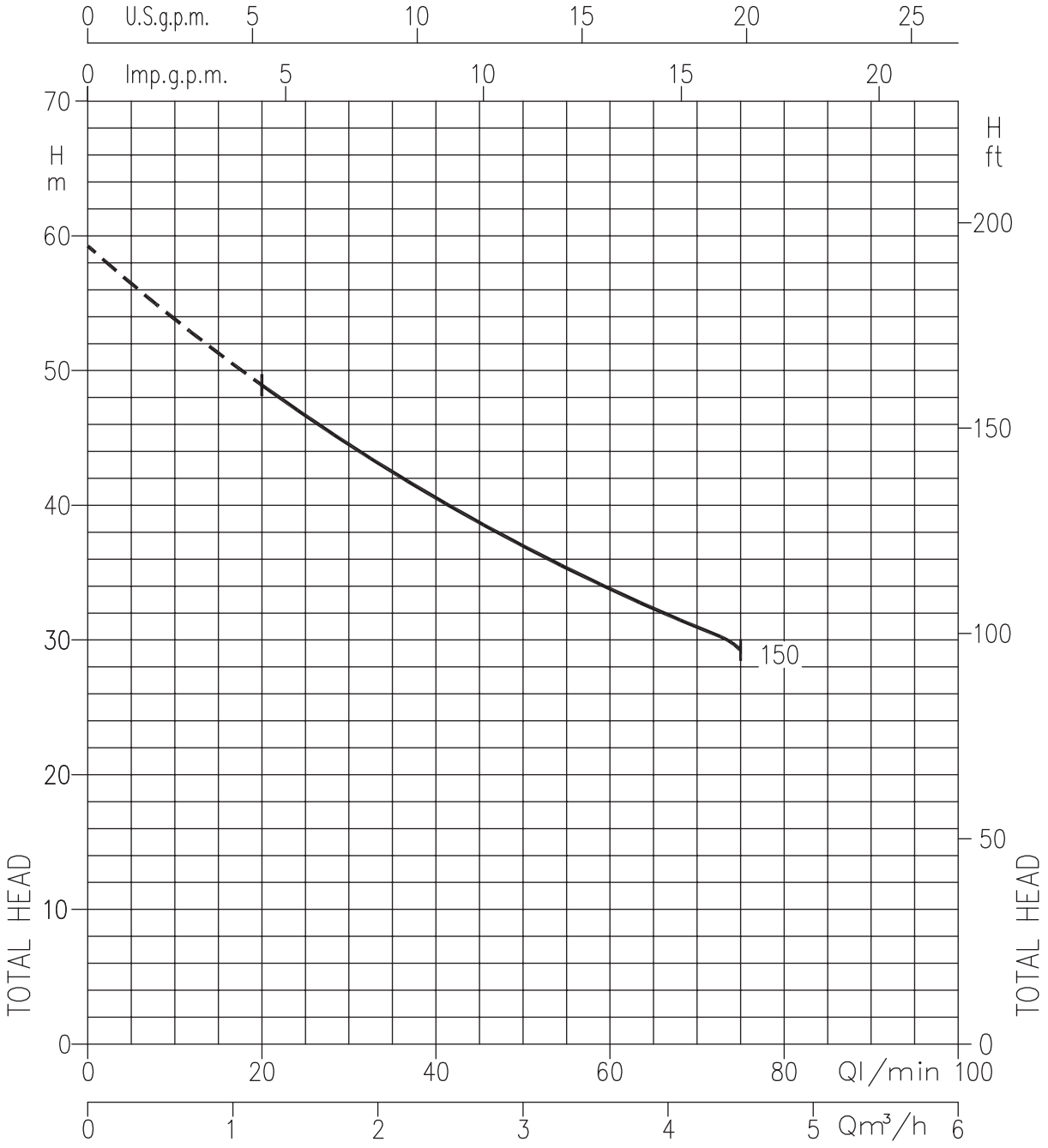

Rotation speed ≈ 2800 min-1
Test standard: ISO 9906:2012 – Grade 3B

CONSTRUCTION

50Hz

Rev. I

SECTIONAL VIEW

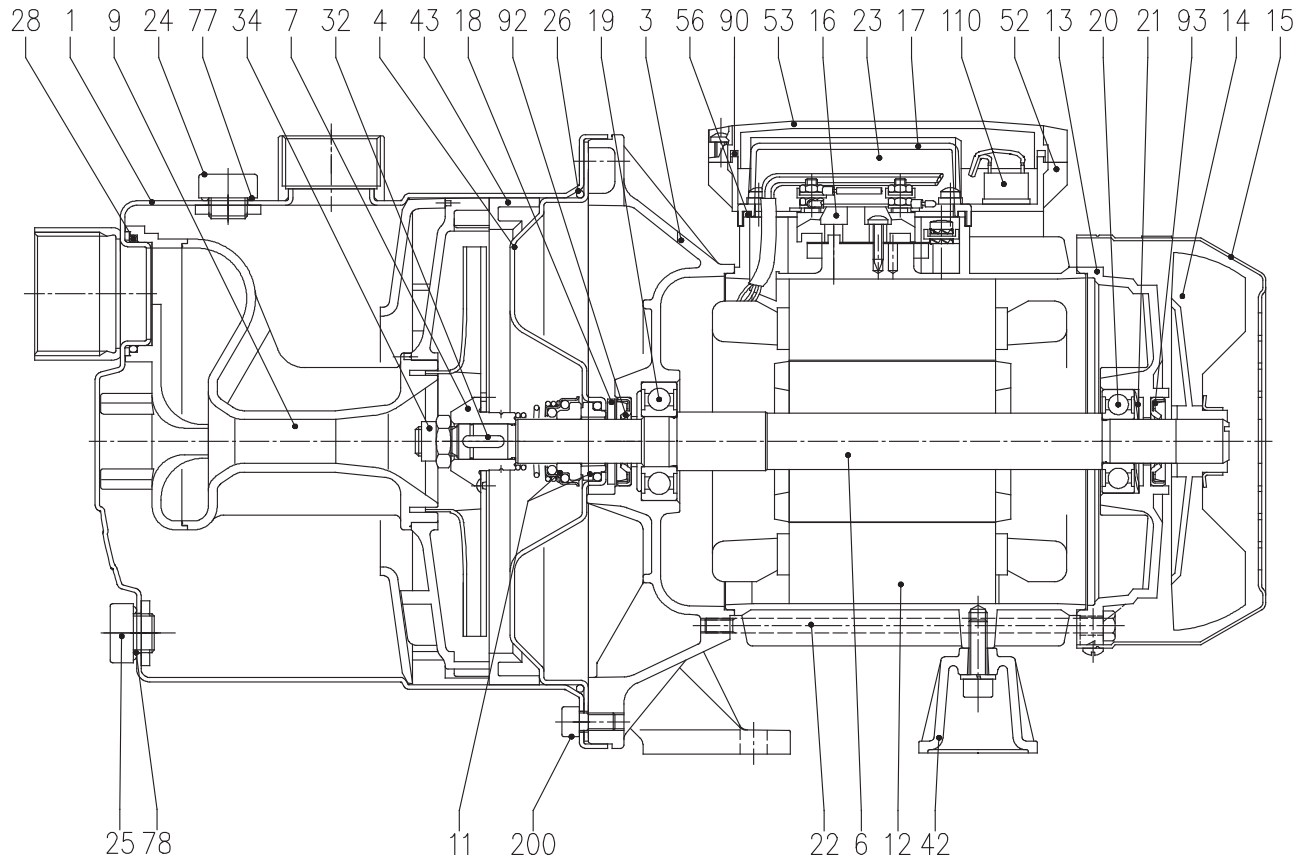

N°	PART NAME	MATERIAL	Q.TY
1	Casing	AISI 304	1
3	Motor bracket	Aluminium	1
4	Casing cover	AISI 304	1
6	Shaft with rotor	AISI 303 (Wet extension)	1
7	Impeller	AISI 304	1
9	Diffuser Venturi tube	PPE+PS glass fibre reinforced	1
11	Mechanical seal [6]	Carbon/Ceramic/NBR	1
12	Motor frame with stator	-	1
13	Motor cover	Aluminium	1
14	Fan	PA	1
15	Fan cover	Fe P04 Zincate	1
16	Terminal board	-	1
17	Terminal box cover [2]	Aluminium	1
18	Splash ring	NBR	1
19	Pump side ball bearing	-	1
20	Fan side ball bearing	-	1
21	Adjusting ring	Steel C70	1
22	Tie rod	Fe 420 Zincate	4
23	Capacitor [1]	-	1

N°	PART NAME	MATERIAL	Q.TY
24	Priming plug	PA	1
25	Drain plug	PA	1
26	O-ring	NBR	1
28	O-ring	NBR	1
32	Key	AISI 304	1
34	Impeller nut	AISI 304	1
42	Motor support	Aluminium	1
43	Space diffuser	PPE+PS glass fibre reinforced	1
52	Capacitor box [1]	ABS class V-0	1
53	Capacitor box cover [4]	ABS class V-0 [4]	1
56	Box gasket	NBR	1
77	O-ring	NBR	1
78	O-ring	NBR	1
90	Terminal box cover gasket [5]	NBR	1
92	Lip seal [3]	-	1
93	Lip seal [3]	-	1
110	Protector [1]	-	1
200	Screw	Stainless steel A2 UNI7323	8

[1] Only for single phase
[2] Only for three phase
[3] Only for IP55
[4] Whit gasket in NBR only for version single phase JEX 80, 100, 120
[5] Only for JEXM 150 IP55
[6] see Mechanical Seal page.301

MECHANICAL SEAL

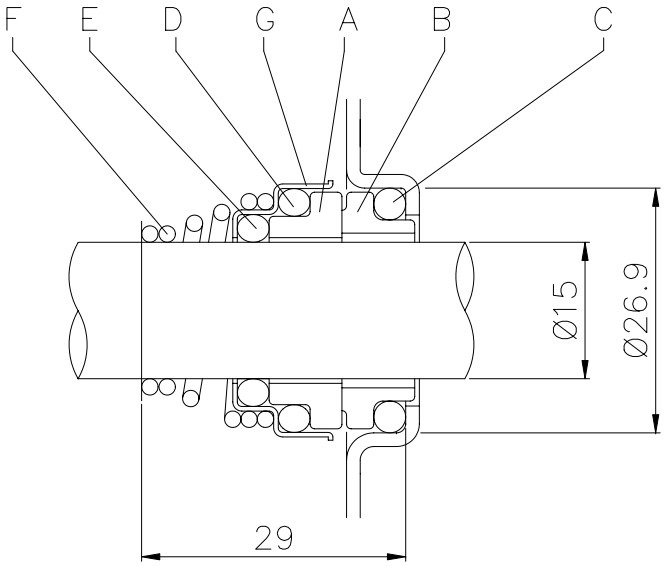

REF	PART NAME	MATERIAL
A	Rotary seal ring	Ceramic
B	Stationary seal ring	Carbon graphite
C	O Ring	NBR
D	O Ring	NBR
E	O Ring	NBR
F	Self driving spring	AISI 316
G	Frame	AISI 304

BEARINGS

Pump type		Ball Bearing			
			(*)		(*)
Single Phase	Three Phase	Pump side	Pump side	Fan side	Fan side
JEXM 80	JEX 80	6203 2RSH	-	6202 2RSH	-
JEXM 100	JEX 100	6203 2RSH	6203-ZZ C3	6202 2RSH	6202-ZZ C3
JEXM 120	JEX 120	6203 2RSH	6203-ZZ C3	6202 2RSH	6202-ZZ C3
JEXM 150	JEX 150	6204 2RSH	6204-ZZ C3	6203 2RSH	6203-ZZ C3

(*) Only for IE3 Motors

DIMENSIONS AND WEIGHT

50Hz

Rev. I

PUMP

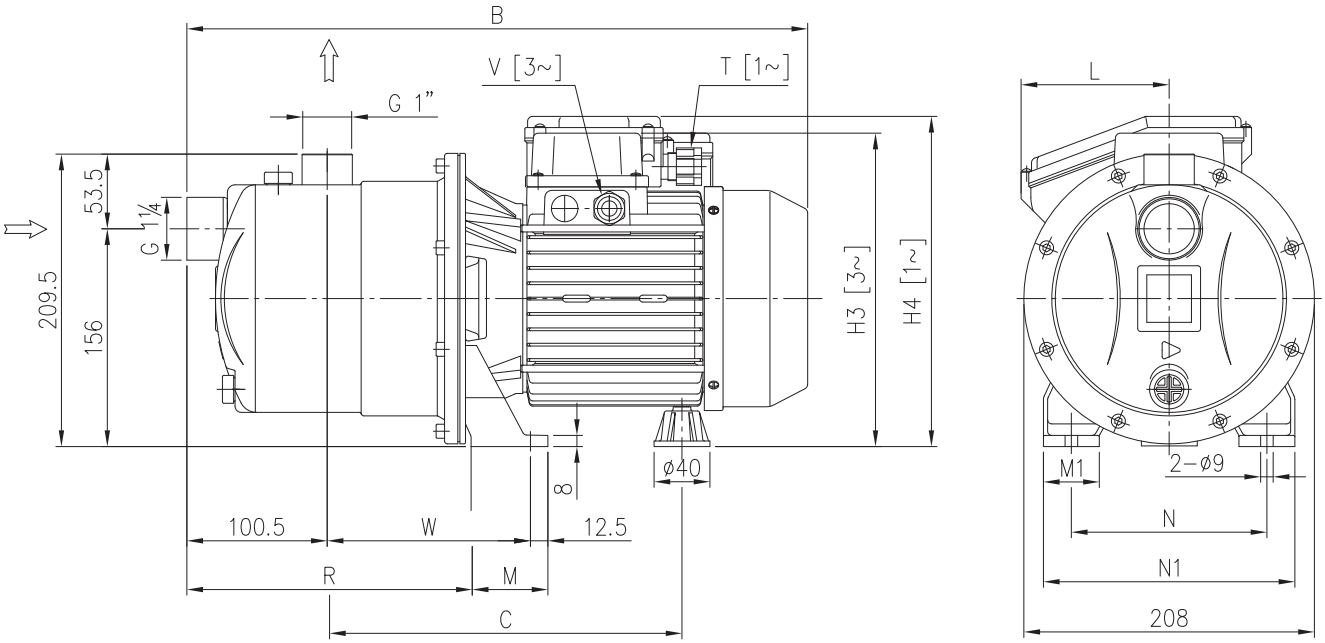

Pump type JEXM-JEX	Dimensions in mm															Weight [kgf]		
	B	(*)	C	H3 [3~]	H4 [1~]	L [1~]	M	M1	N	N1	R	T [1~]	(*) V [3~]	V [3~]	W	[1~]	[3~]	(*) [3~]
80	419	-	232.5	207.5	216	84	50	38	120	160	206.5	PG11	-	PG11	143.5	10.2	10.2	-
100	419	419	232.5	207.5	216	84	50	38	120	160	206.5	PG11	M16x1.5	PG11	143.5	11.6	11.6	11.6
120	419	419	232.5	207.5	216	84	50	38	120	160	206.5	PG11	M16x1.5	PG11	143.5	11.6	11.6	11.6
150	444.5	469.5	254	224.5	236.5	106	55	40	140	180	203.5	PG13.5	M20x1.5	PG11	145.5	14.3	15.3	16.2

[1~] Single phase
[3~] Three phase
(*) Only for IE3 Motors

DIMENSIONS AND WEIGHT

50Hz

Rev. I

PACKING

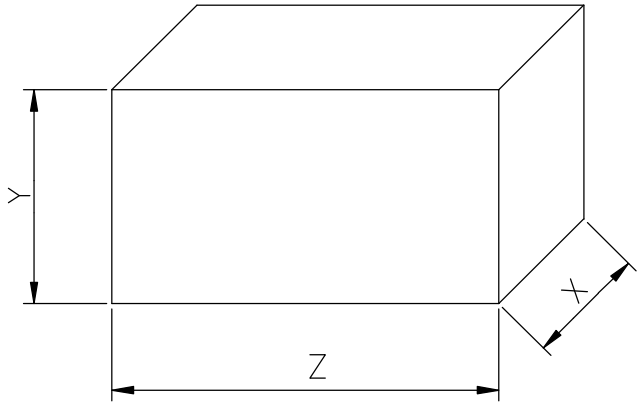

Pump type		Packing [mm]						Weight [kgf]		
Single Phase	Three Phase	X	(*)	Y	(*)	Z	(*)	[1~]	[3~]	(*) [3~]
JEXM 80	JEX 80	222	-	265	-	462	-	10.9	10.9	-
JEXM 100	JEX 100	222	222	265	265	462	462	12.3	12.3	12.3
JEXM 120	JEX 120	222	222	265	265	462	462	12.3	12.3	12.3
JEXM 150	JEX 150	222	227	265	275	462	497	15	16	16.9

[1~] Single phase
[3~] Three phase
(*) Only for IE3 Motors

TECHNICAL DATA 50Hz

Rev. I

MOTOR DATA

Pump type		Power		Efficiency		Capacitor		Efficiency (% load) Three phase η %			Input [kW]		Full load current [A]			Locked rotor current [A]		
Single Phase	Three Phase	[kW]	[HP]	Single Phase	Three Phase	Single Phase [µF]	[V]	50%	75%	100%	Single Phase	Three Phase	Single Phase 230 V	Three Phase 230 V	Three Phase 400 V	Single Phase 230 V	Three Phase 230 V	Three Phase 400 V
JEXM 80	JEX 80	0.6	0.8	-	-	16	450	-	-	-	1.05	0.97	4.7	3.3	1.9	16.1	17.0	9.7
JEXM 100	JEX 100	0.75	1.0	-	IE2	20	450	77.2	80.9	81.3	1.33	1.15	6.4	3.6	2.1	22.7	22.0	12.9
-	JEX 100	0.75	1.0	-	IE3	-	-	80.9	82.3	82.1	-	1.15	-	3.6	2.1	-	19.7	11.4
JEXM 120	JEX 120	0.88	1.2	-	IE2	20	450	77.2	80.9	81.3	1.39	1.15	6.7	3.6	2.1	22.7	22.0	12.9
-	JEX 120	0.88	1.2	-	IE3	-	-	80.9	82.3	82.1	-	1.15	-	3.6	2.1	-	19.7	11.4
JEXM 150	JEX 150	1.1	1.5	-	IE2	35	450	79.7	82.5	83.0	1.70	1.80	7.6	5.5	3.2	32.5	45.0	25.7
-	JEX 150	1.1	1.5	-	IE3	-	-	83.5	84.3	84.6	-	1.77	-	5.8	3.3	-	47.4	27.4

NOISE DATA

Pump type		Power		L_{pA} - dB(A) *
Single Phase	Three Phase	[kW]	[HP]	
JEXM 80	JEX 80	0.6	0.8	71
JEXM 100	JEX 100	0.75	1,0	
JEXM 120	JEX 120	0.88	1.2	
JEXM 150	JEX 150	1.1	1.5	76

* Mean value of several measures at 1m distance around the pump.
Tollerance ± 2.5 dB.

INSTALLATION

50Hz

Rev. I

If you use this pump on suction condition , it tends to breath the air from outside because the pressure in pump becomes vaccum condition when it stopped.So water in the pump sometimes fall down to breath the air from pipe connection.If it is used to operate continuously under this condition,this is the cause of breakdown to overheat inside the pump.
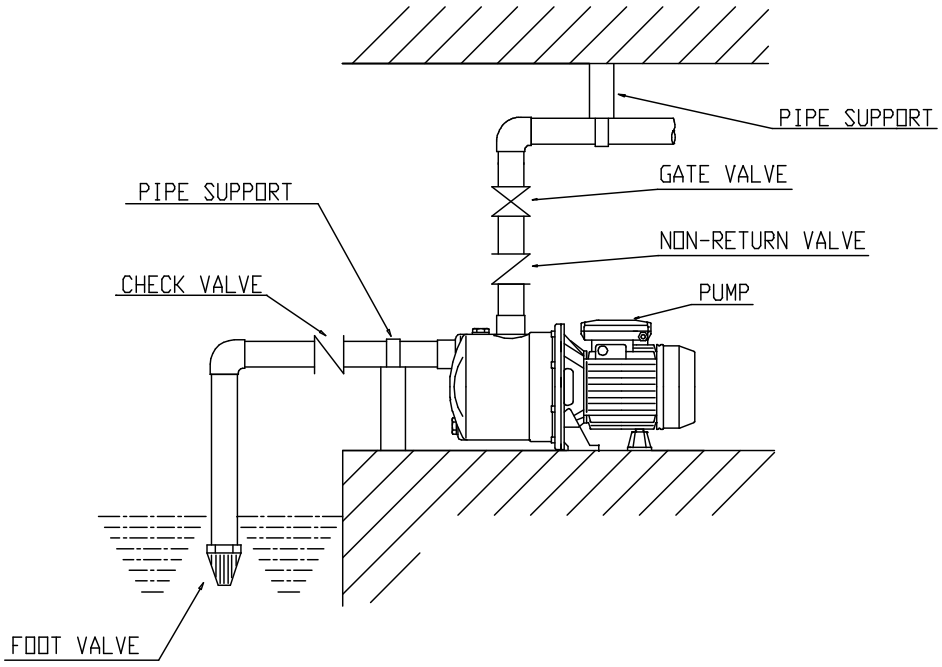
So please install foot valve or check valve at suction pipe in order to prevent the pump from such a condition.And moreover will you please support the suction pipe and the delivery one to prevent the pump from leaning the weight of pipe.