Boosterkar

EBARA

CONTENTS

50Hz

Rev. Q

	Page
- SPECIFICATIONS	**200**
PERFORMANCE RANGE	201
SELECTION CHART	202
TYPE KEY	203
CURVE SPECIFICATIONS	204
PERFORMANCE CURVE MD 32-250/5.5	205
PERFORMANCE CURVE MD 32-250/7.5	205
PERFORMANCE CURVE MD 32-250/9.2	205
PERFORMANCE CURVE MD 32-250/11	205
PERFORMANCE CURVE MD 40-250/11	206
PERFORMANCE CURVE MD 40-250/15	206
PERFORMANCE CURVE MD 50-250/15	207
PERFORMANCE CURVE MD 50-250/18.5	207
PERFORMANCE CURVE MD 50-250/22	207
- CONSTRUCTIONS	**300**
SECTIONAL VIEW DRAWING	300
SECTIONAL VIEW TABLE	301
BEARINGS	302
MECHANICAL SEAL	303
FITTINGS	304
- DIMENSIONS AND WEIGHT	**400**
PUMP MD 32-250 / 40-250	400
PUMP MD 40-250 / 50-250	401
PACKING	402
- TECHNICAL DATA	**500**
MOTOR DATA and NOISE DATA	500

SPECIFICATIONS

50Hz

Rev. Q

PUMP		
Liquid Handled	Type of liquid	Clean water
	Temperature [℃]	min. –5 max. +90 max. +110 (H-HS-HW-HSW) max. +120 (E)
Maximum working pressure [MPa]		1
Flange		UNI 2236
Counterflage (On request)		UNI 2247
Construction	Impeller	Closed centrifugal type
	Shaft seal type	Mechanical seal
	Bearing	Sealed ball bearing
Pipe Connection	Suction	Flange to DIN 2532 (50 mm - 65 mm)
	Discharge	Flange to DIN 2532 (32 mm - 40 mm - 50 mm)
Material	Casing	Cast iron
	Impeller	AISI 304
	Shaft seal	Ceramic/Carbon/NBR (for MD) Ceramic/Carbon/FPM (for MDH) SiC/SiC/FPM (for MDHS) Tungsten Carbide/Tungsten Carbide/FPM (for MDHW) Carbon/Ceramic/EPDM VBEGF (for MDE) * Sic/Tungsten Carbide/FPM (for MDHSW)
	Shaft	AISI 304 (wet extension)
	Bracket	Cast iron
Applicable standard of test		ISO 9906:2012- Grade 3B

MOTOR	
Type	Electric – TEFC
	Three Phase
Efficiency level (Reg. 640/2009)	IE2 and IE3 from 5.5 kW up to 22 kW
No. of Poles	2
Rotation speed [min-1]	≈2900
Insulation Class	F
Protection degree (CEI EN 60034-5)	IP 55
Power rating [kW]	5.5 ÷ 22
[HP]	7.5 ÷ 30
Frequency [Hz]	50
Voltage [V]	400/690 ±10%
Over load protection	Provided by the user
Casing material	Aluminium
Base material/motor support	Aluminium / Steel
Dimensions of cable entry	PG 13.5 - PG 16 - PG 21 (see dimensions pages 400-401)

SELECTION CHART

50Hz

Rev. Q

PERFORMANCE RANGE

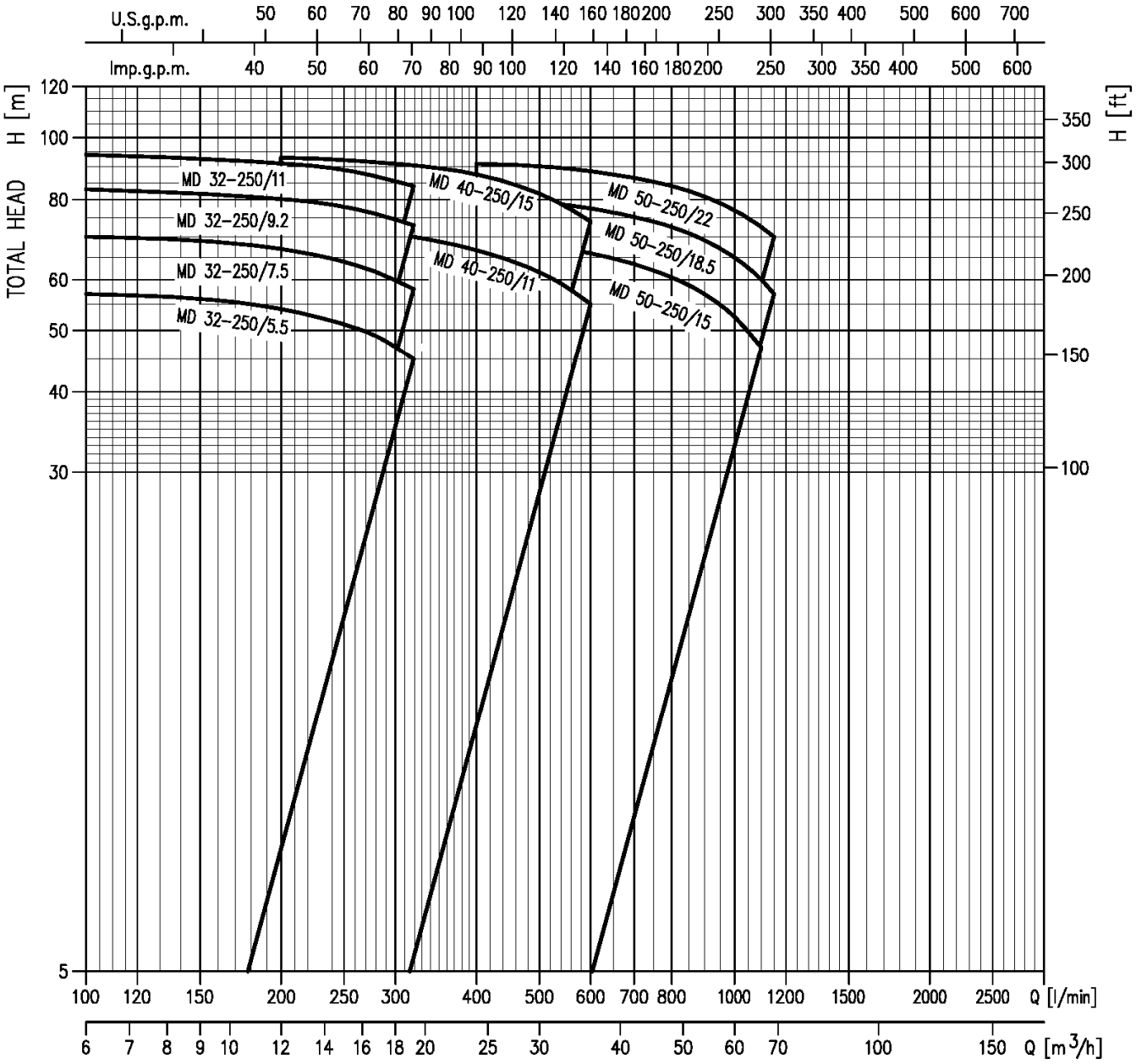

SELECTION CHART TABLE

50Hz

Rev. Q

SELECTION CHART

Pump Type	Power [kW]	Power [HP]	Q=Capacity l/min	0	100	200	250	280	320	400	550	600	667	700	800	1000	1100	1150	1200	1300
			m³/h	0	6	12	15	17	19	24	33	36	40	42	48	60	66	69	72	78
			H=Total manometric head in meters																	
MD 32-250/5.5	5,5	7,5		58	56,5	53	50,4	48,6	45,7	38	-	-	-	-	-	-	-	-	-	-
MD 32-250/7.5	7,5	10		71,5	70	67,1	64,5	62,7	60	53	-	-	-	-	-	-	-	-	-	-
MD 32-250/9.2	9,2	12,5		82,5	81,2	78,2	75,8	74	71,4	65	-	-	-	-	-	-	-	-	-	-
MD 32-250/11	11	15		91	89	86	84	82	79	73	-	-	-	-	-	-	-	-	-	-
MD 40-250/11	11	15		75	-	74	73	72,2	71	68,2	60,1	56,3	49,8	46	-	-	-	-	-	-
MD 40-250/15	15	20		93,8	-	92,7	92,1	91,7	90,8	88,1	81,2	78	72,9	70	-	-	-	-	-	-
MD 50-250/15	15	20		72,8	-	-	-	-	-	71,2	69,2	68,2	66,6	65,7	62,6	54,2	49	46,1	43	-
MD 50-250/18.5	18,5	25		82,8	-	-	-	-	-	81,5	79,5	78,5	77	76,1	73,2	66	61,4	58,9	56,1	50
MD 50-250/22	22	30		93	-	-	-	-	-	91,6	89,7	88,9	87,6	86,9	84,3	77,4	73	70,4	67,7	61,5

TYPE KEY AND CURVE SPECIFICATIONS

50Hz

Rev. Q

TYPE KEY

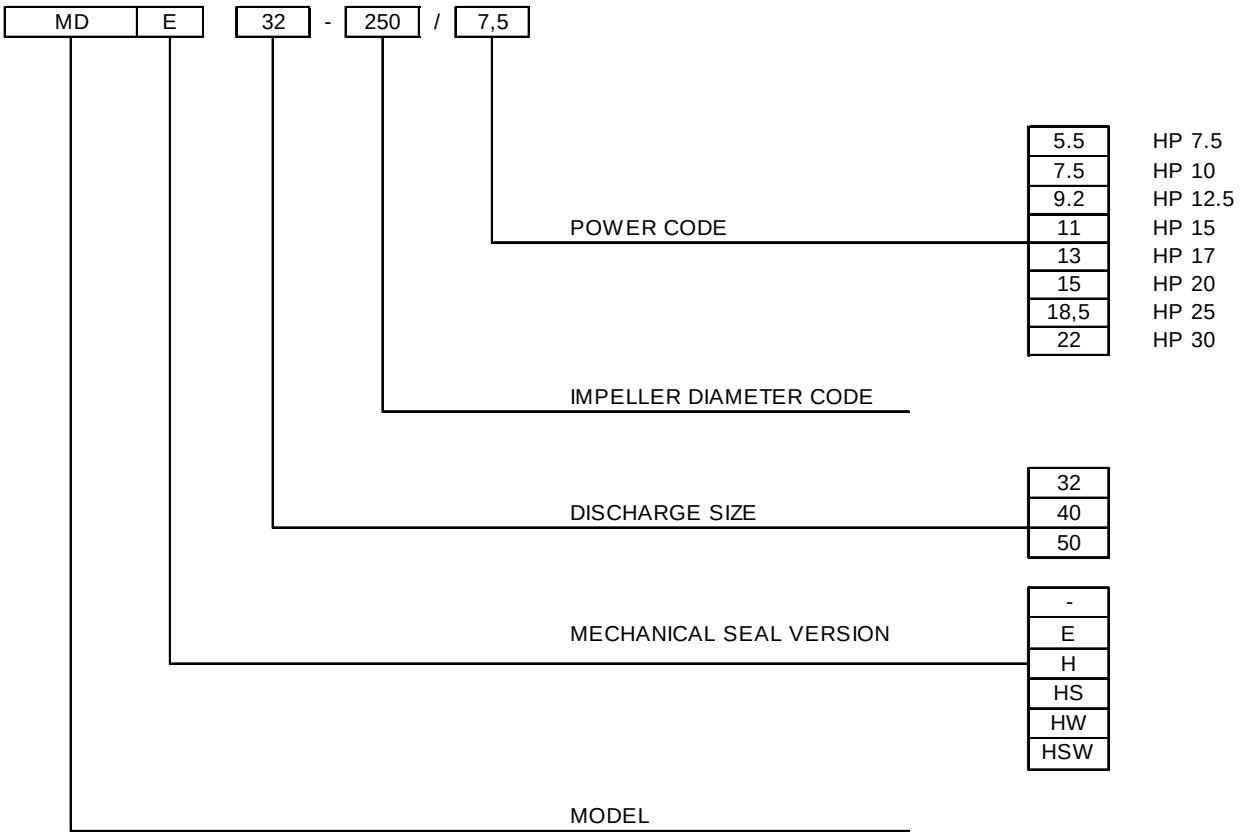

CURVE SPECIFICATIONS

The specifications below qualify the curves shown on the following pages.

Tolerances according to ISO 9906:2012 - Grade 3B
The curves refer to effective speed of asynchronous motors at 50 Hz, 2 poles.
Measurements were carried out with clean water at 20℃ of temperature and with a kinematic viscosity of ν = 1 mm^2/s (1 cSt)
The NPSH curve is an average curve obtained in the same conditions of performance curves.
The continuous curves indicate the recommended working range. The dotted curve is only a guide.
In order to avoid the risk of over-heating, the pumps should not be used at a flow rate below 10% of best efficiency point.

Symbols explanation:

Q	=	volume flow rate
H	=	total head
P_2	=	pump power input (shaft power)
η	=	pump efficiency
NPSH	=	net positive suction head required by the pump
MEI	=	minimum efficiency index

The minimum efficiency index (MEI) is a measure of the quality of a pump size in respect to its mean efficiency. The minimum efficiency index is based on the hydraulic efficiency and on the head at the best efficiency point.

The efficiency of a pump with trimmed impeller is usually lower than that of a pump with the full impeller diameter. The trimming of the impeller will adapt the pump to a fixed duty point, leading to reduced energy consumption. The minimum efficiency index (MEI) is based on the full impeller diameter.

The operation of these water pumps with variable duty points may be more efficient end economic when controlled, for example, by the use of a variable speed drive that matches the pump duty to the system.

MEI = 0.4 for Multistage Vertical 2900rpm

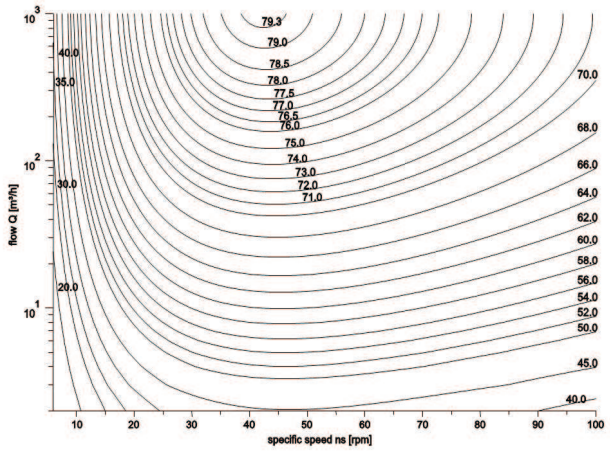

MEI=0.7 for Mutistage Vertical 2900 rpm

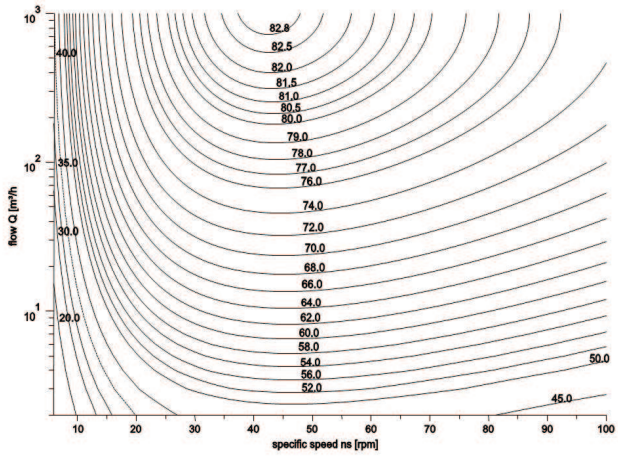

PERFORMANCE CURVE

50Hz

Rev. Q

MD 32-250/5.5 (5.5 kW) MEI > 0.70 – Impeller diameter = 218 mm
MD 32-250/7.5 (7.5 kW) MEI > 0.70 – Impeller diameter = 240 mm
MD 32-250/9.2 (9.2 kW) MEI > 0.70 – Impeller diameter = 254 mm
MD 32-250/11 (11 kW) MEI > 0.70 – Impeller diameter = 265 mm

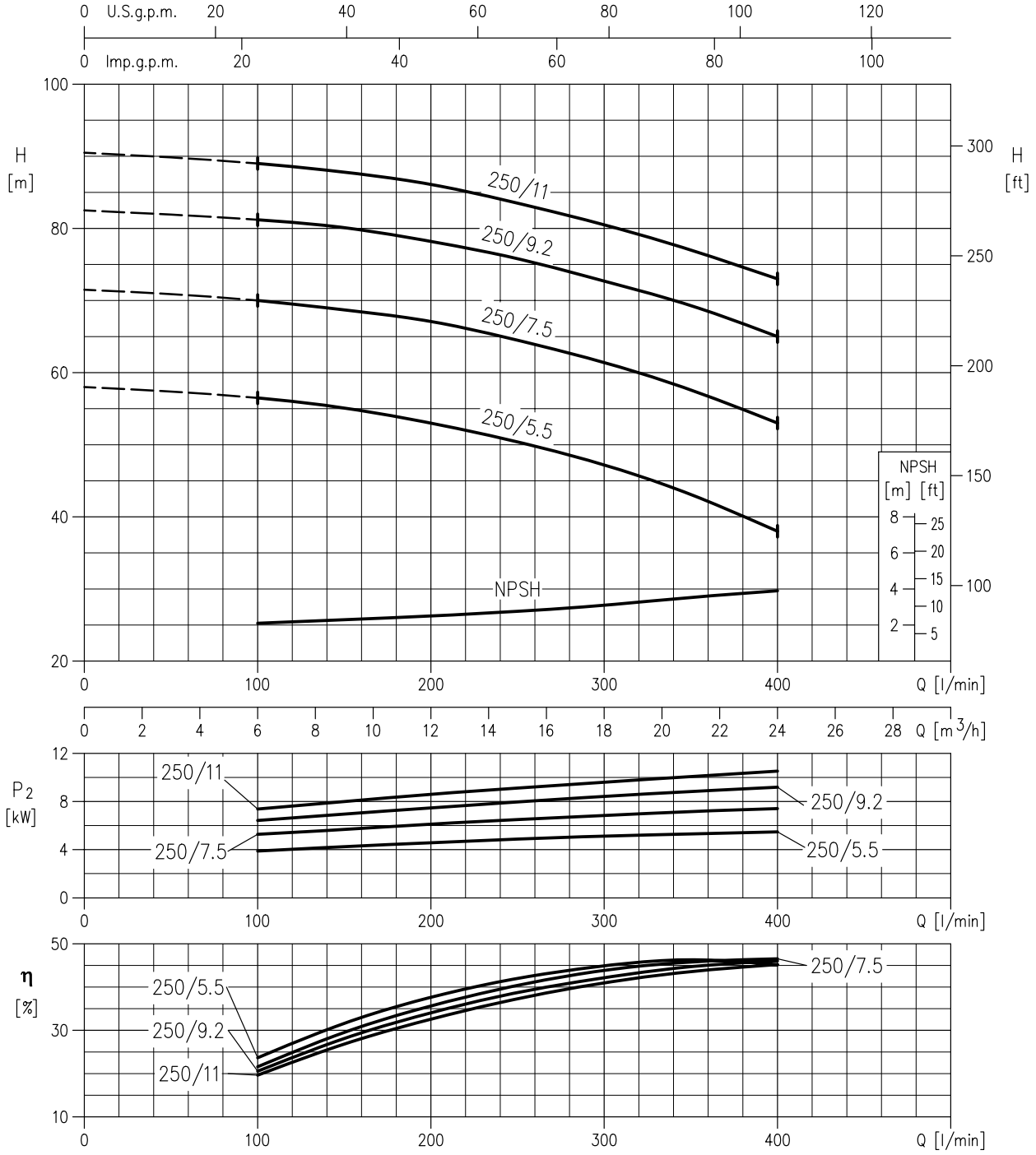

Rotation speed ≈ 2900 min^{-1}
Test standard: ISO 9906:2012 - Grade 3B

PERFORMANCE CURVE

50Hz

Rev. Q

MD 40-250/11 (11 kW) MEI > 0.70 – Impeller diameter = 236 mm
MD 40-250/15 (15 kW) MEI > 0.70 – Impeller diameter = 259 mm

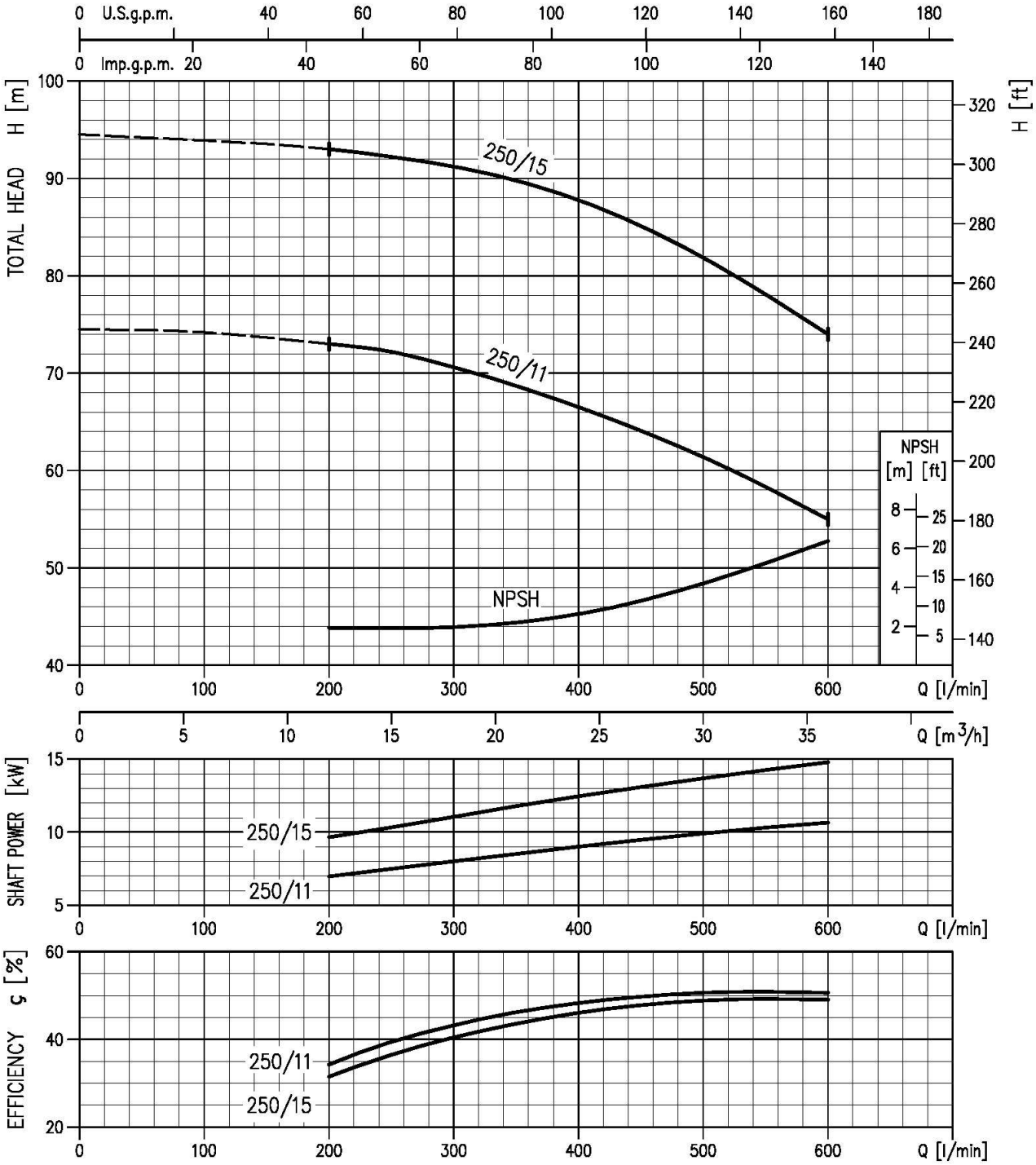

Rotation speed ≈ 2900 min^{-1}
Test standard: ISO 9906:2012 - Grade 3B

PERFORMANCE CURVE

50Hz

Rev. Q

MD 50-250/15 (15 kW) MEI > 0.40 – Impeller diameter = 234 mm
MD 50-250/18.5 (18.5 kW) MEI > 0.40 – Impeller diameter = 248 mm
MD 50-250/22 (22 kW) MEI > 0.40 – Impeller diameter = 261 mm

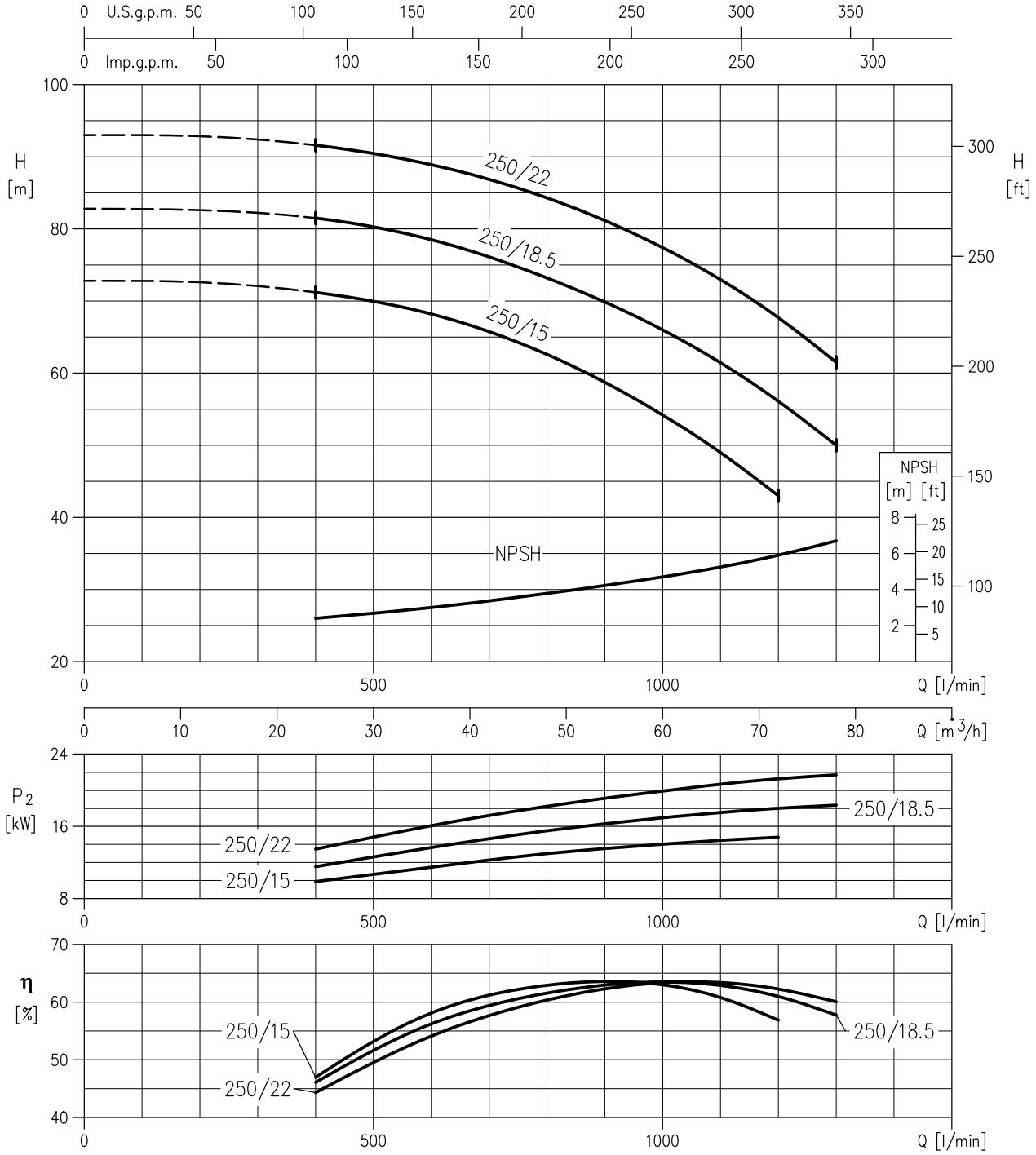

Rotation speed ≈ 2900 min-1
Test standard: ISO 9906:2012 - Grade 3B

SECTIONAL VIEW DRAWING

UP TO 13 kW

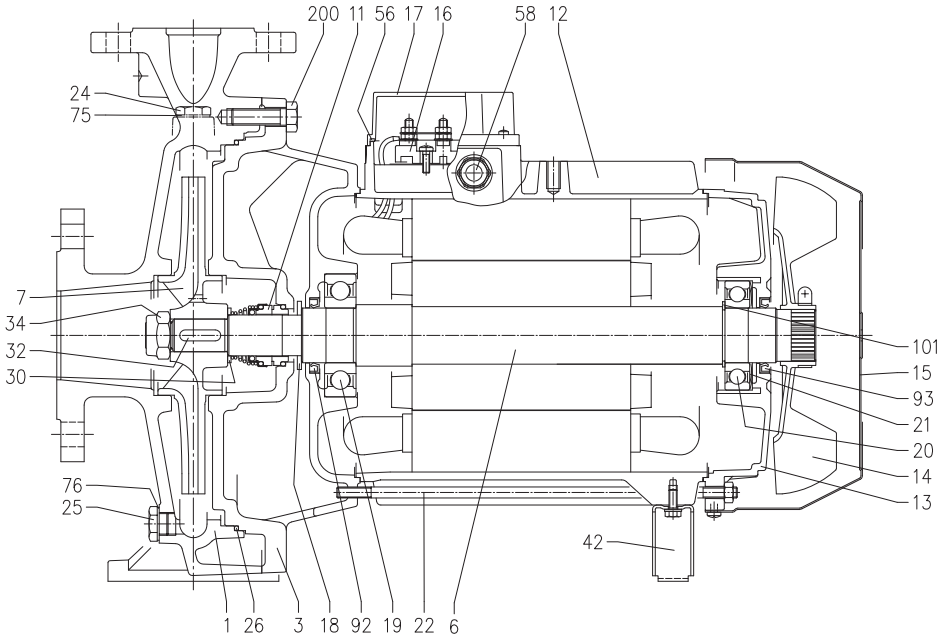

15 kW AND ABOVE

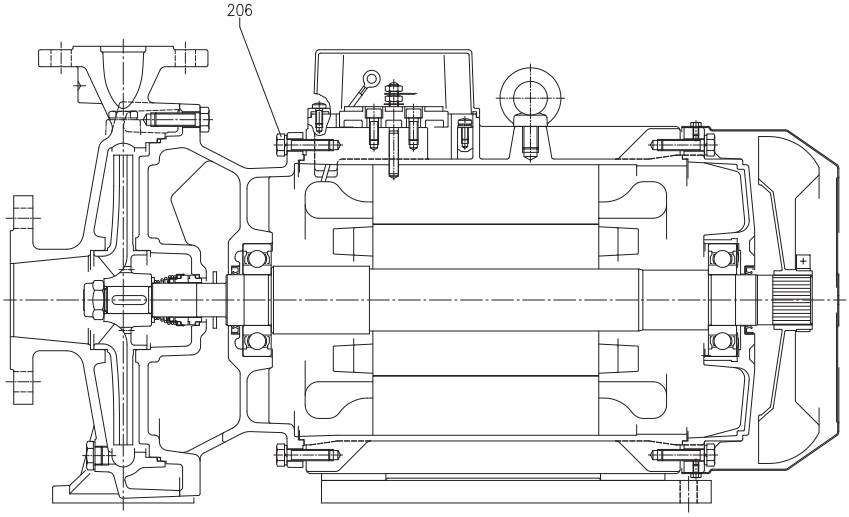

SECTIONAL VIEW TABLE

N°	PART NAME		MATERIAL	DIMENSIONS	STANDARD	N. FOR 1 UNIT
1	Casing		Cast iron EN-GJL-200-EN 1561			1
3	Motor bracket		Cast iron EN-GJL-200-EN 1561			1
6	Shaft with rotor		AISI 304 (Part in contact with liquid)			1
7	Impeller		AISI 304			1
11	Mechanical seal [1]		Carbon/Ceramic/NBR			1
12	Motor frame with stator		-			1
13	Motor cover		Aluminium			1
14	Fan		PP			1
15	Fan cover		Fe P04 Galvanized			1
16	Terminal box		-			1
17	Terminal box cover		Aluminium			1
18	Splash ring	Up to 7.5 kW	NBR	40x21.5x3	EPE DRAWING	1
		9.2 kW and above		50x29.5x3		
19	Pump side ball bearing		-	See table p.302		1
20	Fan side ball bearing		-	See table p.302		1
21	Adjusting ring		Steel C70			1
22	Tie rod	Up to 11 Kw	Fe 42 Galvanized		EPE DRAWING	4
	Screw	15 kW and above	Gv. steel 8.8 strenght class ISO 898/1		UNI 5739	
24	Priming plug		Brass		EPE DRAWING	1
25	Drain plug		Brass		EPE DRAWING	1
26	O-ring		NBR [2]	277x3.53	EPE DRAWING	1
30	Spacer		AISI 304	22.5x26.9x2.5 (up to 7.5kW)	EPE DRAWING	1
				30.5x40x2.5 (9.2 kW and above)		
32	Key		AISI 316	6x6x25 (up to 7.5kW)	UNI 6604	1
				8x7x30 (9.2 kW and above)		
34	Impeller nut		AISI 304	M16x1.5 (up to 7.5kW)	UNI 7474	1
				M20x1.5 (9.2 kW and above)		
42	Foot		Fe P04		EPE DRAWING	1
56	Box gasket		NBR			1
58	Cable entry		-			1
75	Washer		Aluminium	Ø 17 - G3/8		1
76	Washer		Aluminium	Ø 17 - G3/8		1
85	Kit counterflange [3]	Flange	Galvanized steel	See table p.304	EPE DRAWING	2
		Screw for flange	AISI 304	M16x55	UNI 5737	8
		Gasket	EPDM	See table p.304		2
92	Lip seal	Up to 7.5 kW	-	30x47x7	DIN 3760 without spring	1
		From 9.2 to 11 kW		40x55x7		
		From 15 to 22 kW		45x60x7		
93	Lip seal	Up to 7.5 kW	-	30x47x7	DIN 3760 without spring	1
		From 9.2 to 11 kW		40x55x7		
		From 15 to 22 kW		45x60x7		
101	Snap ring (only for 9.2-11 kW)		Carbon tool steels TC 80	Ø 40	UNI 7435	1
200	Screw		Gv. steel 8.8 strenght class ISO 898/1	M12x40	UNI 5739	12
206	Screw	From 15 kW and above	Gv. steel 8.8 strenght class ISO 898/1	M10x40	UNI 5739	4

[1] See constructions mechanical seal p. 303 *On request
[2] FPM for H-HS-HW-HSW version
EPDM for E version
[3] On request

CONSTRUCTION

50Hz

Rev. Q

BEARINGS

Pump type	Ball Bearing	
	Pump side	Fan side
MD 32-250/5.5	6306 2RS1	6206 2RS1
MD 32-250/7.5		
MD 32-250/9.2	6308 2RS1	6208 2RS1
MD 32-250/11		
MD 40-250/11	6308 2RS1	6208 2RS1
MD 40-250/15	6309 2RS1	6309 2RS1
MD 50-250/15	6309 2RS1	6309 2RS1
MD 50-250/18,5		
MD 50-250/22		

CONSTRUCTION

50Hz

Rev. Q

MECHANICAL SEAL

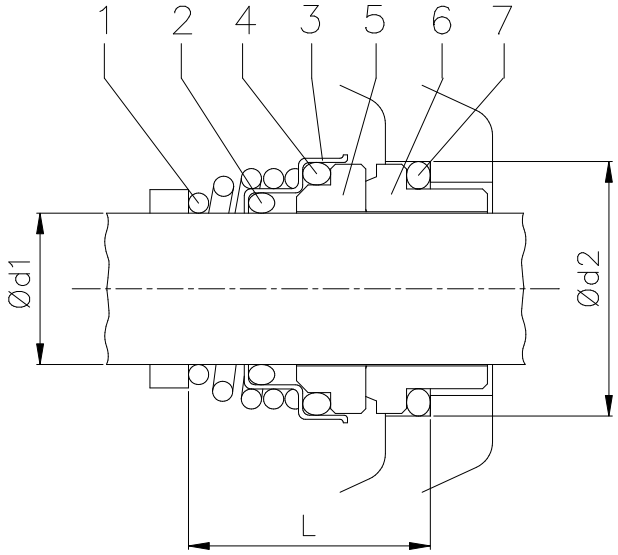

Pump type	Dimensions mm		
	Ø d1	Ø d2	L
MD 32-250/5.5	22	37	37,5
MD 32-250/7.5			
MD 32-250/9.2	30	45	42,5
MD 32-250/11			
MD 40-250/11	30	45	42,5
MD 40-250/15			
MD 50-250/15	30	45	42,5
MD 50-250/18,5			
MD 50-250/22			

REF	PART NAME	MATERIAL					
		Standard version	Optional				
		(MD)	(H)	(HS)	(HW)	(E)	(HSW)
1	Self driving spring	AISI 316	AISI 316	AISI 316	AISI 316	AISI 316	AISI 316
2	O Ring	NBR	FPM	FPM	FPM	EPDM	FPM
3	Frame	AISI 304	AISI 304/AISI 316*	AISI 316	AISI 316	AISI 304	AISI 316
4	O Ring	NBR	FPM	FPM	FPM	EPDM	FPM
5	Rotary seal ring	Ceramic	Ceramic	SiC	Tung. carbide	Ceramic	Tungsten carbide
6	Stationary seal ring	Carbon graphite	Carbon graphite	SiC	Tung. carbide	Carbon graphite	Tungsten carbide
7	O Ring	NBR	FPM	FPM	FPM	EPDM	FPM

* Only for Ø 30

FITTINGS

ZINKED STEEL COUNTER FLANGE (STANDARD)

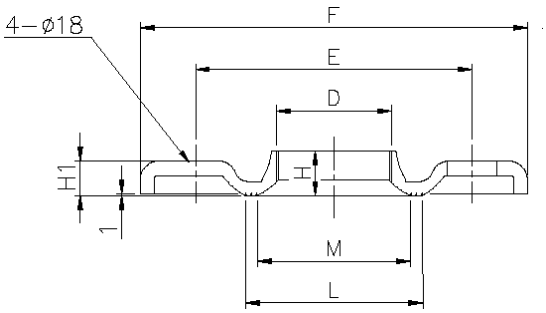

DIN	D	E	F	H	H1	L	M
32	G 1 1/4	100	140	15	11.5	67	50
40	G 1 1/2	110	150	17.5	11.5	72	58
50	G 2	125	165	19	15	89	70
65	G 2 1/2	145	185	23	14	104	88

AISI 304-AISI 316L COUNTER FLANGE (ON REQUEST)

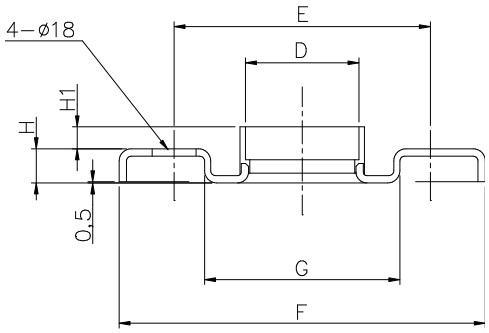

DIN	D	E	F	G	H	H1
32	G 1 1/4	100	140	76	14	15.5
40	G 1 1/2	110	150	81	14	15.5
50	G 2	125	165	96	16	18
65	G 2 1/2	145	185	116	16	24

GASKET

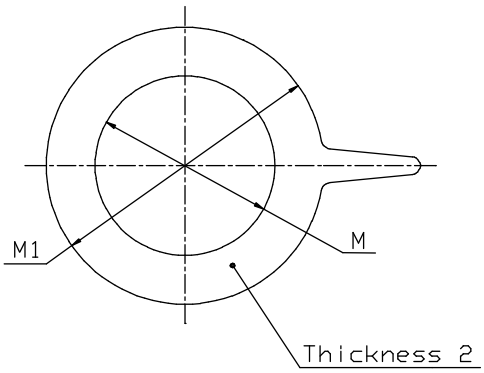

DIN	M	M1
32	38	82
40	50	93
50	60	107
65	80	125

Material : EPDM version for standard
FPM version for hot water maximum 110℃

DIMENSIONS AND WEIGHT

50Hz

Rev. Q

PUMP MD 32-250 / 40-250

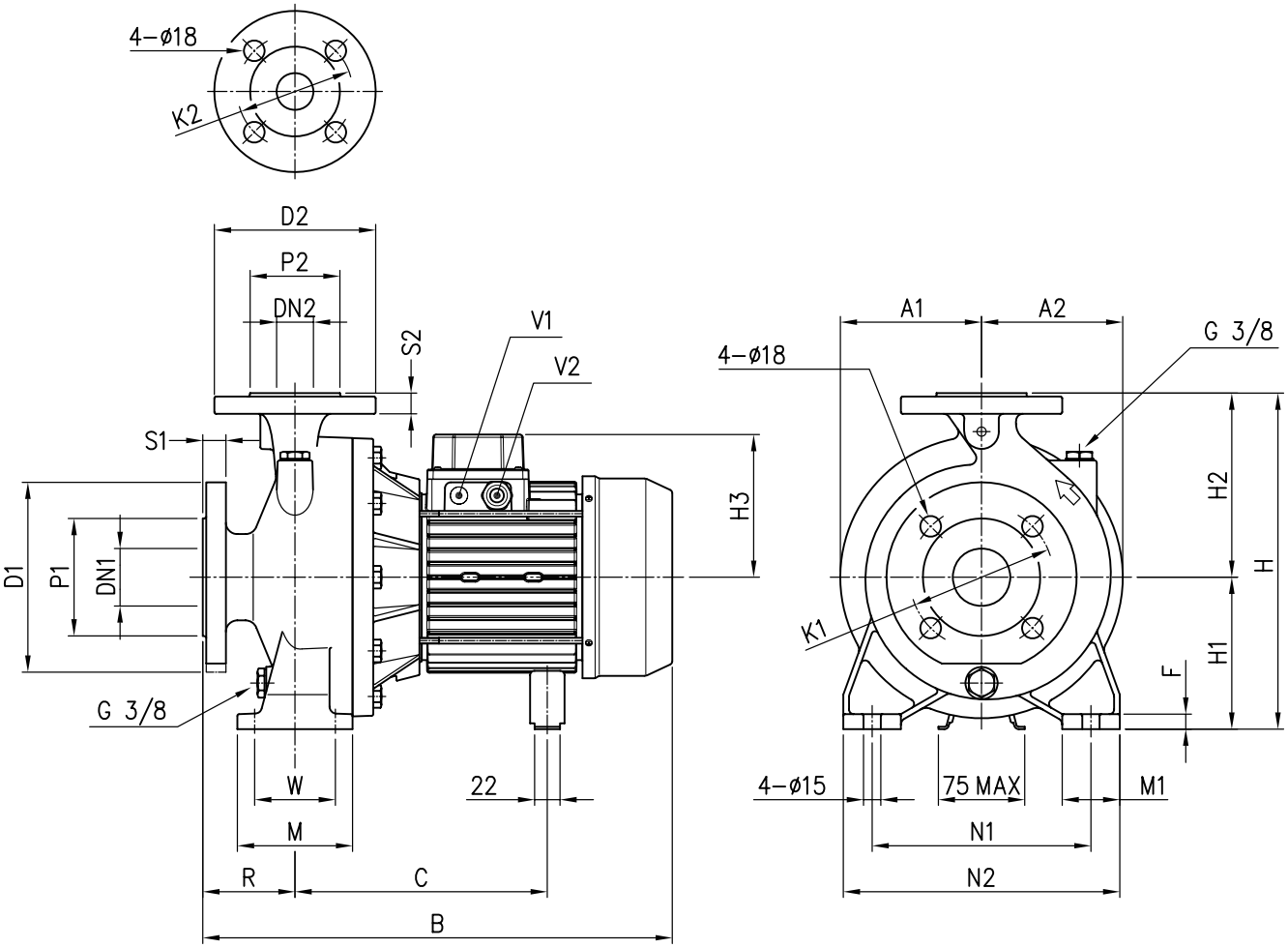

Model	Dimensions (mm)																													Weight [kgf]	
	Ø DN1	Ø P1	Ø K1	Ø D1	S1	Ø DN2	Ø P2	Ø K2	Ø D2	S2	H	H1	H2	H3	R	W	M	M1	N1	N2	A1	A2	B	B (*)	C	F	V1	V2		
MD 32-250/5.5	50	102	125	165	20	32	78	100	140	18	405	180	225	150	100	95	125	65	250	320	176	176	539	539	275	15	PG 13.5	PG 16	74,2	74,2
MD 32-250/7.5	50	102	125	165	20	32	78	100	140	18	405	180	225	150	100	95	125	65	250	320	176	176	537	557	275	15	PG 13.5	PG 16	74,6	77,7
MD 32-250/9.2	50	102	125	165	20	32	78	100	140	18	405	180	225	178	100	95	125	65	250	320	176	176	589	589	354	15	PG 13.5	PG 21	94,5	94,5
MD 32-250/11	50	102	125	165	20	32	78	100	140	18	405	180	225	178	100	95	125	65	250	320	176	176	589	589	354	15	PG 13.5	PG 21	95	97,4
MD 40-250/11	65	122	145	185	20	40	88	110	150	18	405	180	225	178	100	95	125	65	250	320	176	176	589	589	354	15	PG 13.5	PG 21	98	100,4

(*) Only for IE3 Motors

DIMENSIONS AND WEIGHT

50Hz

Rev. Q

PUMP MD 40-250 / 50-250

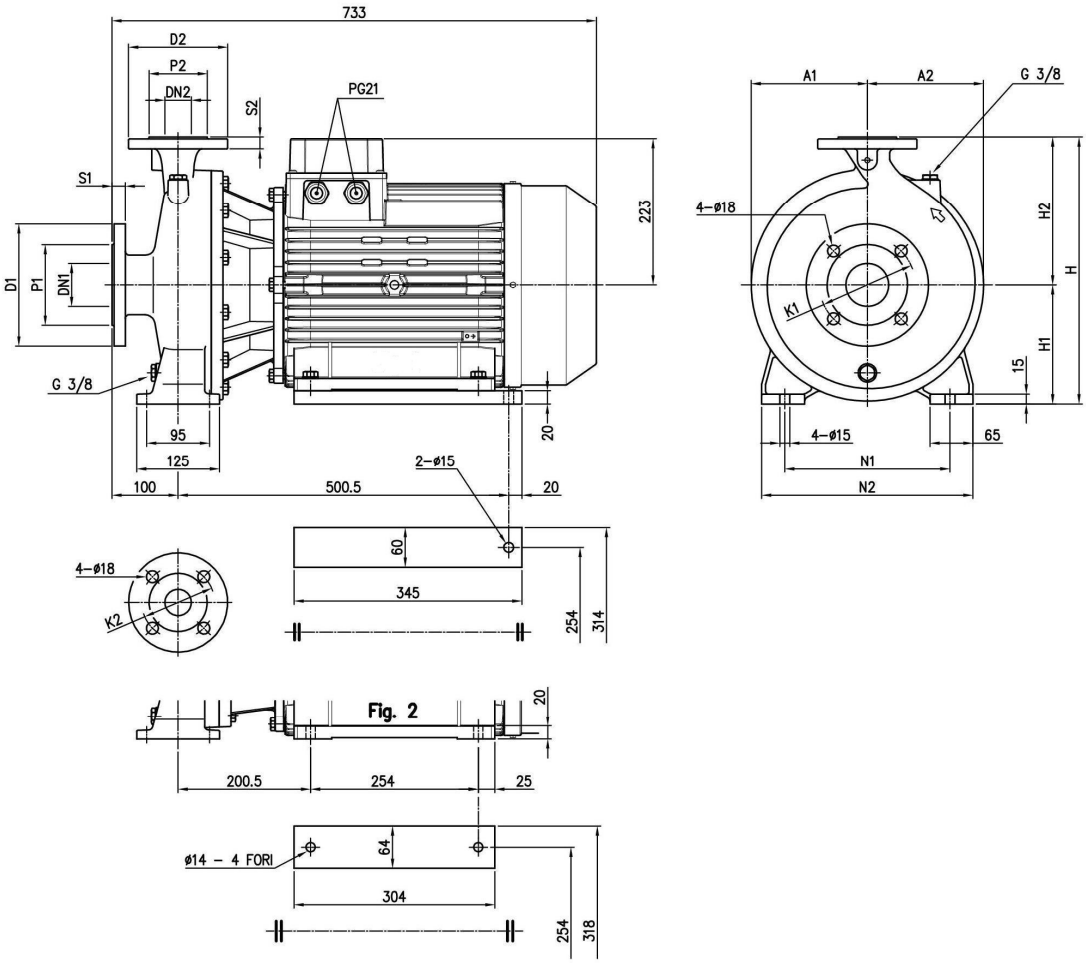

Model	Dimensions [mm]																	Weight [kgf]	
	Ø DN1	Ø P1	Ø K1	Ø D1	S1	Ø DN2	Ø P2	Ø K2	Ø D2	S2	H	H1	H2	N1	N2	A1	A2		(*)
MD 40-250/15	65	122	145	185	20	40	88	110	150	18	405	180	225	250	320	176	176	102	105,1
MD 50-250/15	65	122	145	185	20	50	102	125	165	20	405	180	225	250	320	176	176	103	106,1
MD 50-250/18.5	65	122	145	185	20	50	102	125	165	20	405	180	225	250	320	176	176	130	136,3
MD 50-250/22	65	122	145	185	20	50	102	125	165	20	405	180	225	250	320	176	176	155	161,1

(*) Only for IE3 Motors

DIMENSIONS AND WEIGHT

50Hz

Rev. Q

PACKING

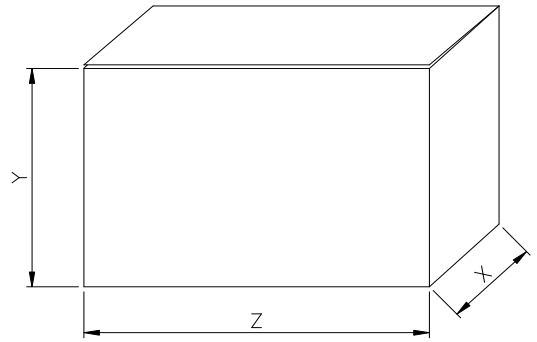

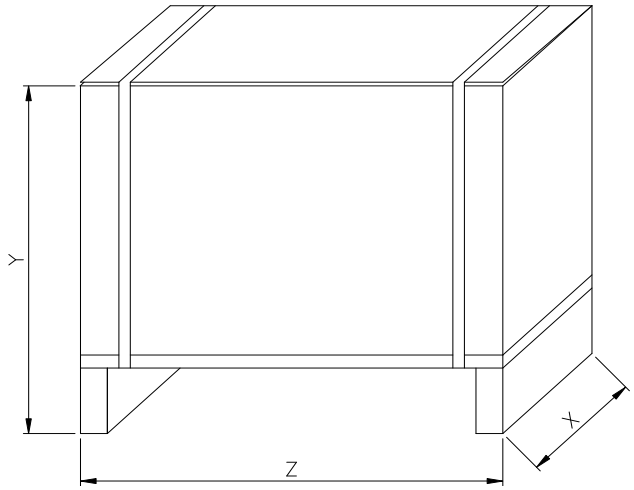

Pump type	Packing [mm]			Weight [kgf]
	X	Y	Z	
MD 32-250/5.5	375	560	585	80
MD 32-250/7.5	375	560	585	83
MD 32-250/9.2	375	560	585	102
MD 32-250/11	375	560	585	106
MD 40-250/11	375	560	685	113
MD 40-250/15	375	615	865	116
MD 50-250/15	375	615	865	114
MD 50-250/18.5	375	615	865	146
MD 50-250/22	375	615	865	168

TECHNICAL DATA

50Hz

Rev. Q

MOTOR DATA

Pump type	Power [kW]	Power [HP]	Efficiency	Efficiency (% load) h % 50%	75%	100%	Input [kW]	Full load current [A] 400 V	690 V	Locked rotor current [A] 400 V	690 V
MD 32-250/5.5	5.5	7.5	IE2	82.9	86.0	87.4	6.29	10.4	6.0	116	67
MD 32-250/5.5	5.5	7.5	IE3	89.2	90.6	90.4	6.09	10.6	6.1	115.3	67
MD 32-250/7.5	7.5	10	IE2	86.1	88.2	88.8	8.45	13.7	7.9	140.0	81
MD 32-250/7.5	7.5	10	IE3	89.0	90.7	90.8	8.26	13.6	7.9	144	83
MD 32-250/9.2	9.2	12.5	IE2	88.6	90.0	89.9	10.23	16.8	9.7	166	96
MD 32-250/9.2	9.2	12.5	IE3	90.1	90.8	90.9	10.12	17.2	10.0	166	96
MD 32-250/11	11	15	IE2	88.9	90.3	90.2	12.20	21.9	12.7	186	108
MD 32-250/11	11	15	IE3	90.4	91.2	91.8	11.98	21.3	12.3	184	107
MD 40-250/11	11	15	IE2	88.9	90.3	90.2	12.20	21.9	12.7	186	108
MD 40-250/11	11	15	IE3	90.4	91.2	91.8	11.98	21.3	12.3	184	107
MD 40-250/15	15	20	IE2	89.3	91.0	91.1	18.00	30.0	17.3	246	143
MD 40-250/15	15	20	IE3	91.2	92.0	91.9	16.32	27.7	17.3	225	130
MD 50-250/15	15	20	IE2	89.3	91.0	91.1	18.00	30.0	17.3	246	143
MD 50-250/15	15	20	IE3	91.2	92.0	91.9	16.32	27.7	17.3	225	130
MD 50-250/18.5	18.5	25	IE2	89.8	91.2	91.7	20.17	36.3	21.0	325	188
MD 50-250/18.5	18.5	25	IE3	91.6	93.0	92.6	19.98	35.0	20.3	328	190
MD 50-250/22	22	30	IE2	89.9	91.9	92.4	23.80	40.8	23.6	383	222
MD 50-250/22	22	30	IE3	92.0	93.1	93.2	23.58	39.7	23.6	391	227

NOISE DATA

Pump type	Pow er [kW]	[HP]	L_{pA} - dB(A) *
MD 32-250/5.5	5,5	7,5	75
MD 32-250/7.5	7,5	10	
MD 32-250/9.2	9,2	12,5	80
MD 32-250/11	11	15	
MD 40-250/11	11	15	80
MD 40-250/15	15	20	83-82
MD 50-250/15	15	20	83-82
MD 50-250/18,5	18,5	25	
MD 50-250/22	22	30	

*Mean value of several measures at 1m distance around the pump.
Tollerance ± 2.5 dB.