Boosterkar

EBARA

CONTENTS

50Hz

Rev. C

	Page
- SPECIFICATIONS	**200**
SELECTION CHART	201
TYPE KEY AND CURVE SPECIFICATIONS	202
PERFORMANCE CURVE MMD 65-250	204
PERFORMANCE CURVE MMD 80-160	205
PERFORMANCE CURVE MMD 80-200	206
PERFORMANCE CURVE MMD 80-250	207
PERFORMANCE CURVE MMD 100-200	208
- CONSTRUCTIONS	**300**
SECTIONAL VIEW	300
MECHANICAL SEAL	302
- DIMENSIONS AND WEIGHT	**400**
PUMP	400
- TECNICAL DATA	**500**
MOTOR DATA	500
NOISE DATA	500

SPECIFICATION

50Hz

Rev. C

PUMP		
Liquid Handled	Type of liquid	Clean water
	Temperature [℃]	min. -10 max +90
Maximum working pressure [MPa]		1
Flange		UNI 2236
Counterflange (On request)		UNI 2247
Construction	Impeller	Closed centrifugal type
	Shaft seal type	Mechanical seal
	Bearing	On the motor
Pipe Connection	Suction	PN16 - UNI 2223-29
	Discharge	PN16 - UNI 2223-29
Material	Casing	CAST IRON
	Impeller	CAST IRON
	Shaft seal	Sic/Sic/NBR
	Shaft	AISI
	Bracket	CAST IRON
Applicable standard of test		ISO 9906 – Annex A

MOTOR	
Type	Electric - TEFC
	Three Phase
Efficiency level (Reg. 640/2009)	IE3 from 7.5 kW up to 37 kW
No. of Poles	2
Rotation speed [min^{-1}]	≈2900
Insulation Class	F
Protection degree (CEI EN 60034-5)	IP 55
Power rating [kW]	22 ÷ 37
Power rating [HP]	30 ÷ 50
Frequency [Hz]	50
Voltage [V]	400/690 ±10%
Over load protection	Provided by the user
Casing material	Alluminum (up to MEC 160) Cast iron (MEC 180 and above)

SELECTION CHART

50Hz

Rev. C

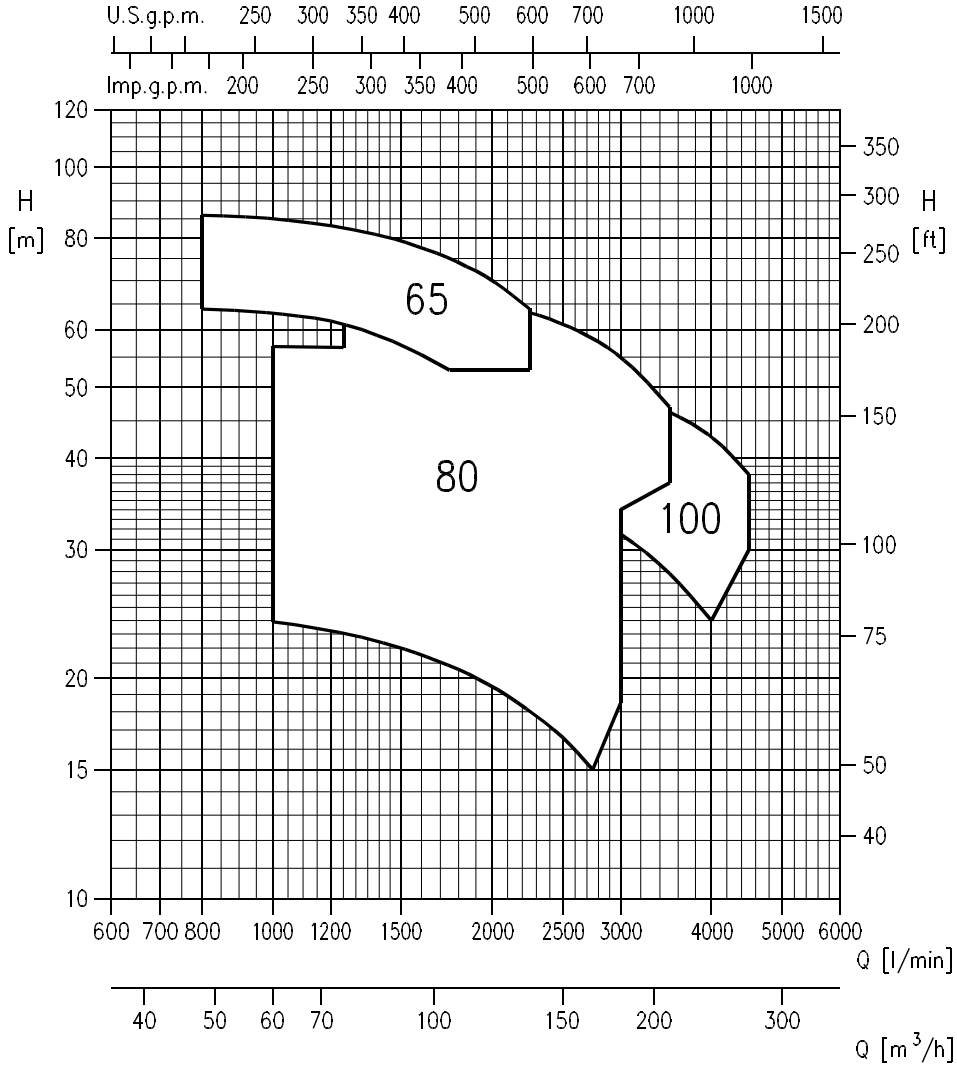

MMD 2 Poles: 65, 80, 100 Version

Pump type MMD	Power		Capacity													
			l/min	0	800	1000	1250	1500	1750	2000	2250	2500	2750	3000	3500	4000	4500
Three Phase	[kW]	[HP]	m³/h	0	48	60	75	90	105	120	135	150	165	180	210	240	270
			H=Total manometric head in meters														
MMD 65-250/22	22	30		65	64	63	61	57	53	-	-	-	-	-	-	-	-
MMD 65-250/30	30	40		78	77	76	74	70	66	60	53	-	-	-	-	-	-
MMD 65-250/37	37	55		86.5	86	85	83	79	75	70	64	-	-	-	-	-	-
MMD 80-160/11	11	15		24.8	-	24	23	22	21	19.5	18	16.5	15	-	-	-	-
MMD 80-160/15R	15	20		29.5	-	28.5	28.0	27.0	26.0	24.5	23.0	21.5	20.0	18.5	-	-	-
MMD 80-160/15	15	20		35	-	34	33.3	32.5	31.8	31	29	27.5	26	24.3	-	-	-
MMD 80-200/18,5	18.5	25		42	-	42	41	40	38.5	37	35	33	30.5	28	-	-	-
MMD 80-200/22	22	30		47	-	47	46.5	45.5	44.5	43	41	39	37	34	-	-	-
MMD 80-200/30	30	40		55.5	-	55	54	53	52	51	49	47	45	43	37	-	-
MMD 80-200/37	37	55		57.5	-	57	57	56.5	56	55	54	52.5	51	48	42	-	-
MMD 80-250/37	37	55		68.5	-	-	67.5	67.0	66.2	65.0	63.3	61.0	58.3	55.0	47.0	-	-
MMD 100-200/22	22	30		40	-	-	-	38.5	38	37	36	34.5	33	31.5	28	24	-
MMD 100-200/30	30	40		48	-	-	-	47.0	46.3	45.6	44.8	43.7	42.4	41.0	38.0	34.6	30
MMD 100-200/37	37	55		54	-	-	-	53.5	53.5	53	52	51	50	49	46	43	38

TYPE KEY AND CURVE SPECIFICATIONS

50Hz

Rev. C

TYPE KEY:

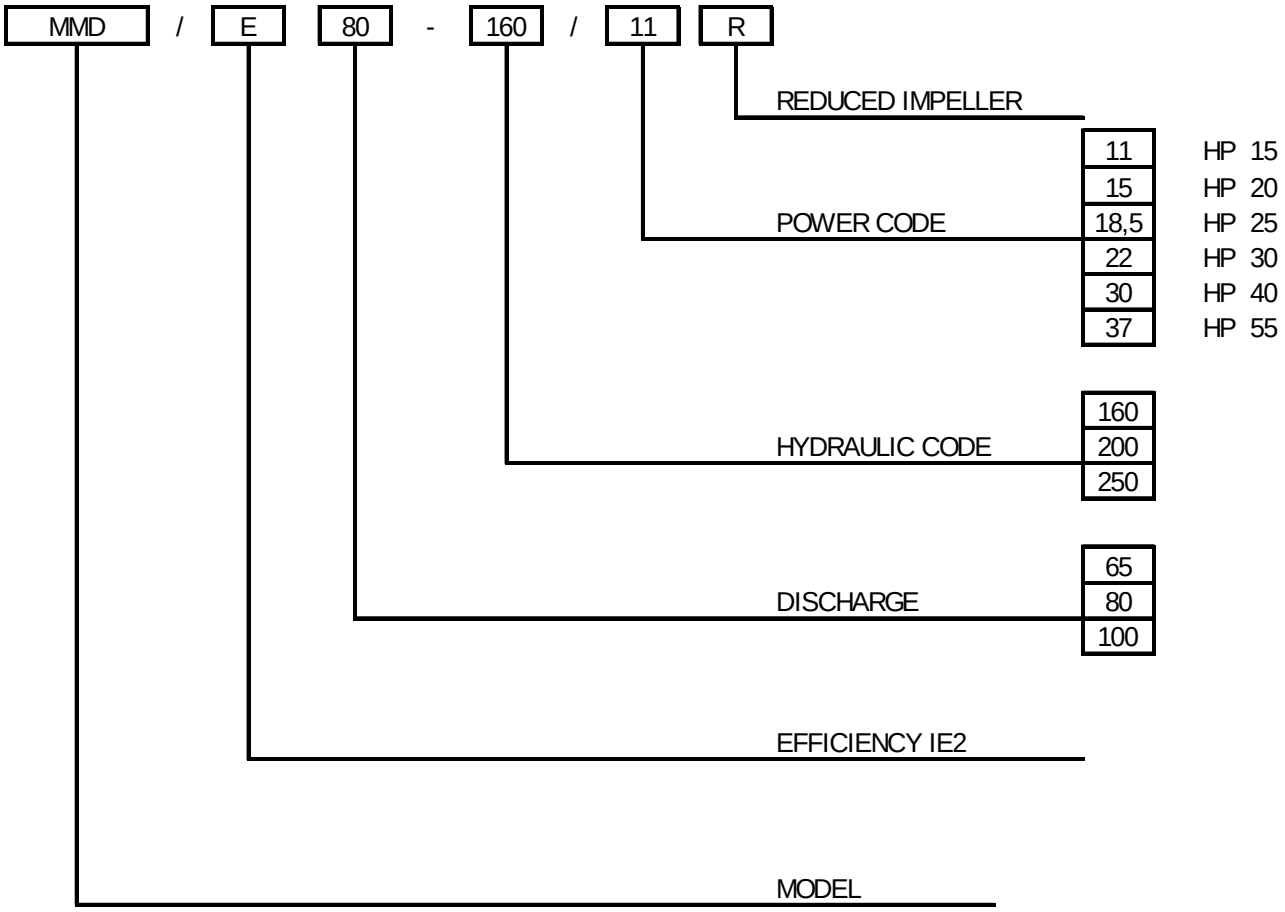

PERFORMANCE CURVE SPECIFICATIONS

The specifications below qualify the curves shown on the following pages.

Tolerances according to ISO 9906 Annex A
The curves refer to effective speed of asynchronous motors at 50 Hz
Measurements were carried out with clean water at 20℃ of temperature and with a kinematic viscosity of ν = 1 mm^2/s (1 cSt)

The NPSH curve is an average curve obtained in the same conditions of performance curves.
The continuous curves indicate the recommended working range. The dotted curve is only a guide.
In order to avoid the risk of over-heating, the pumps should not be used at a flow rate below 10% of best efficiency point.

Symbols explanation:

Q	=	volume flow rate
H	=	total head
P_2	=	pump power input (shaft power)
η	=	pump efficiency
NPSH	=	net positive suction head required by the pump
MEI	=	minimum efficiency index

The minimun efficiency index (MEI) is a measure of the quality of a pump size in respect to its mean efficiency. The minimum efficiency index is based on the hydraulic efficiency and on the head at the best efficiency point.

The efficiency of a pump with trimmed impeller is usually lower than that of a pump with the full impeller diameter. The trimming of the impeller will adapt the pump to a fixed duty point, leading to reduced energy consumption. The minimum efficiency index (MEI) is based on the full impeller diameter.

The operation of these water pumps with variabile duty points may be more efficient end economic when controlled, for example, by the use of a variable speed drive that matches the pump duty to the system.

MEI = 0.4 for ESCC 2900 rpm

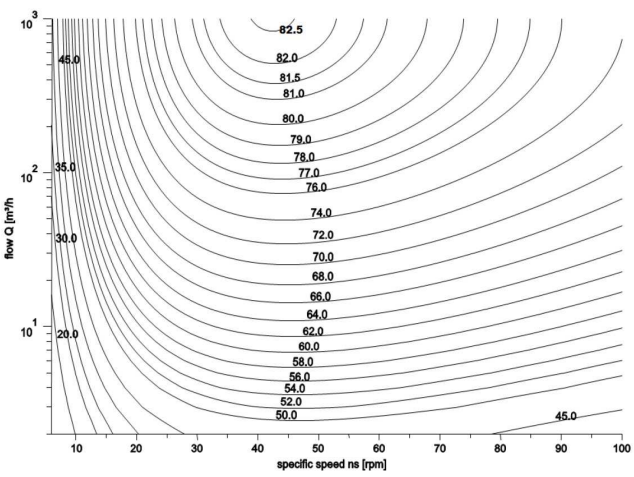

MEI = 0.7 for ESCC 2900rpm

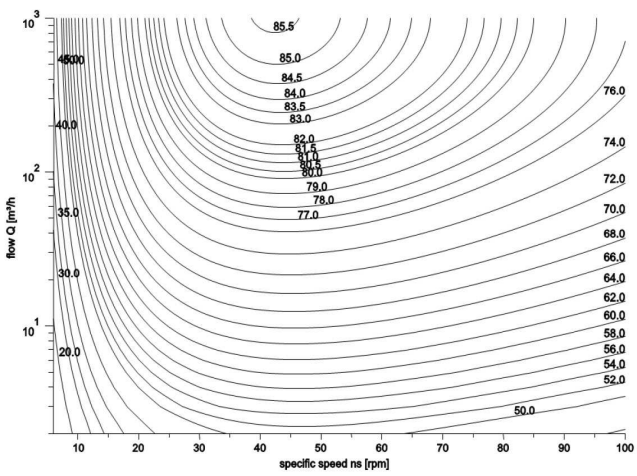

PERFORMANCE CURVE

50Hz

Rev. C

MMD 65-250/22 (22 kW) MEI > 0.40 Impeller diameter = 220x10 mm
MMD 65-250/30 (30 kW) MEI > 0.40 Impeller diameter = 240x10 mm
MMD 65-250/37 (37 kW) MEI > 0.40 Impeller diameter = 250x10 mm

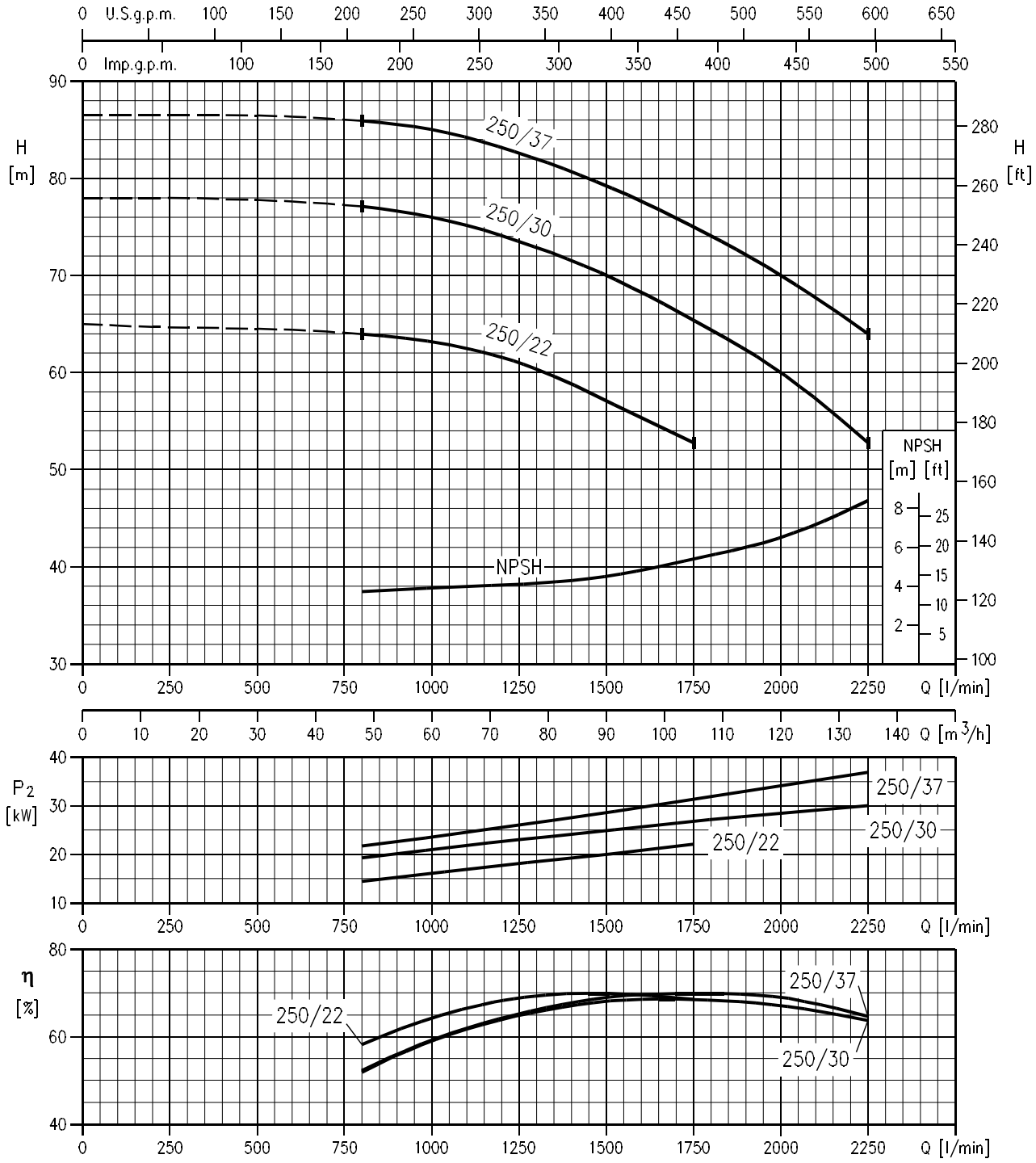

Rotation speed ≈ 2900 min^{-1}
Test standard: ISO 9906 – Annex A

PERFORMANCE CURVE

50Hz

Rev. C

MMD 80-160/11 (11 kW) MEI > 0.40 Impeller diameter = 140x27 mm
MMD 80-160/15R (15 kW) MEI > 0.40 Impeller diameter = 150x27 mm
MMD 80-160/15 (15 kW) MEI > 0.40 Impeller diameter = 160x27 mm

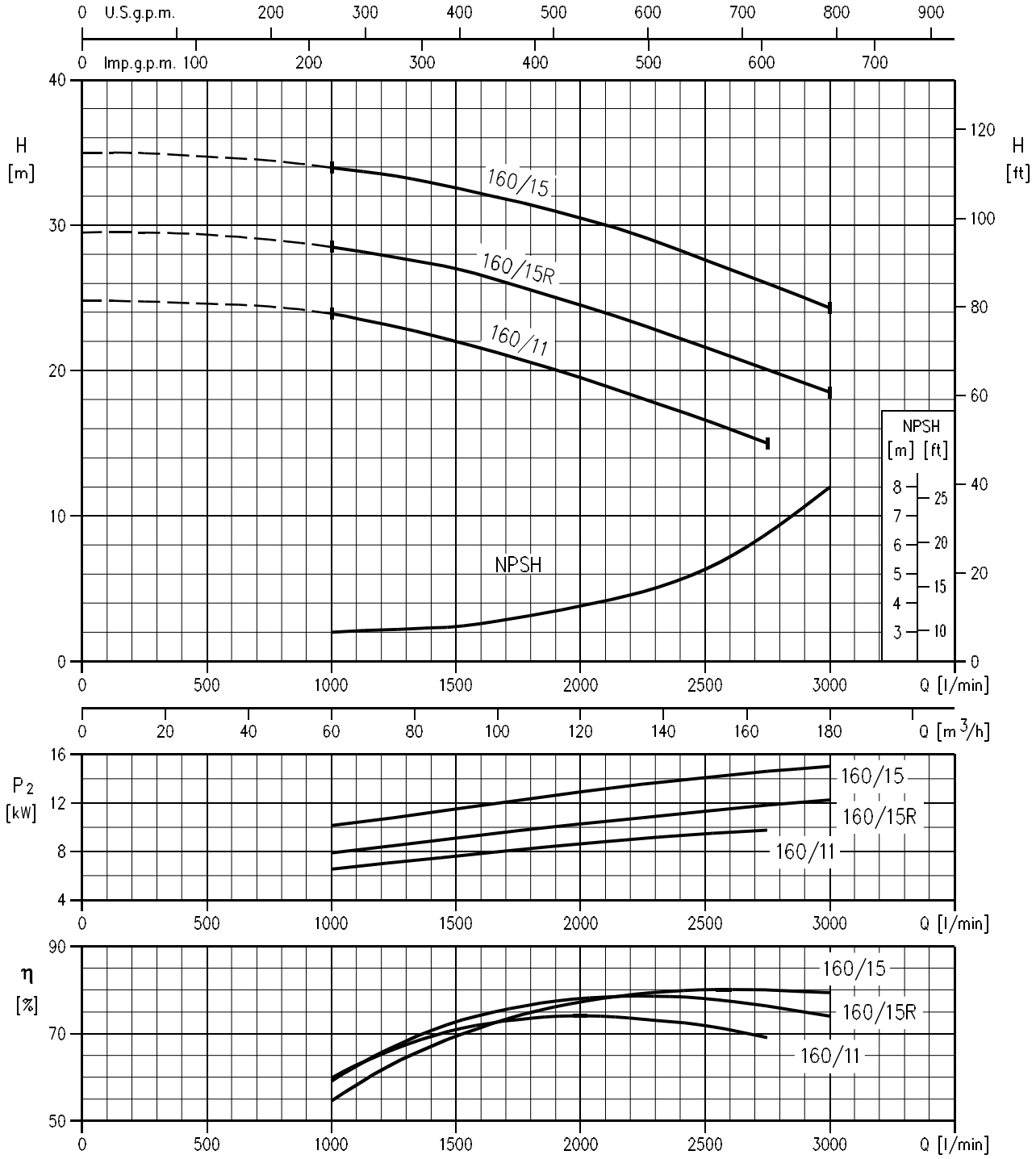

Rotation speed ≈ 2900 min^{-1}
Test standard: ISO 9906 – Annex A

PERFORMANCE CURVE

50Hz

Rev. C

MMD 80-200/18,5 (18.5 kW) MEI > 0.40 Impeller diameter = 180x20 mm
MMD 80-200/22 (22 kW) MEI > 0.40 Impeller diameter = 190x20 mm
MMD 80-200/30 (30 kW) MEI > 0.40 Impeller diameter = 205x20 mm
MMD 80-200/37 (37 kW) MEI > 0.40 Impeller diameter = 209x20 mm

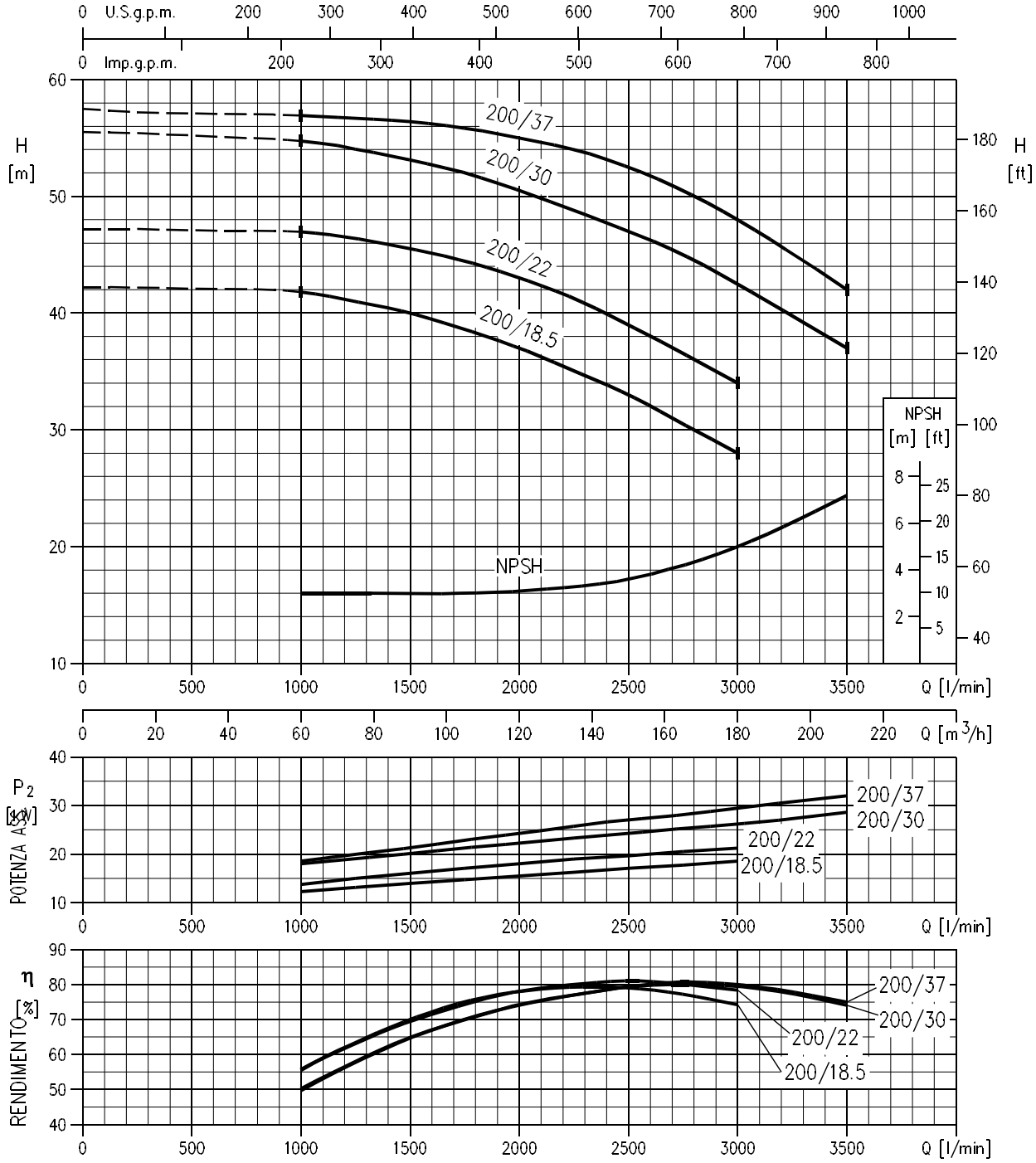

Rotation speed ≈ 2900 min^{-1}
Test standard: ISO 9906 – Annex A

PERFORMANCE CURVE

50Hz

Rev. C

MMD 80-250/37 (37 kW) MEI > 0.40 Impeller diameter = 226x17 mm

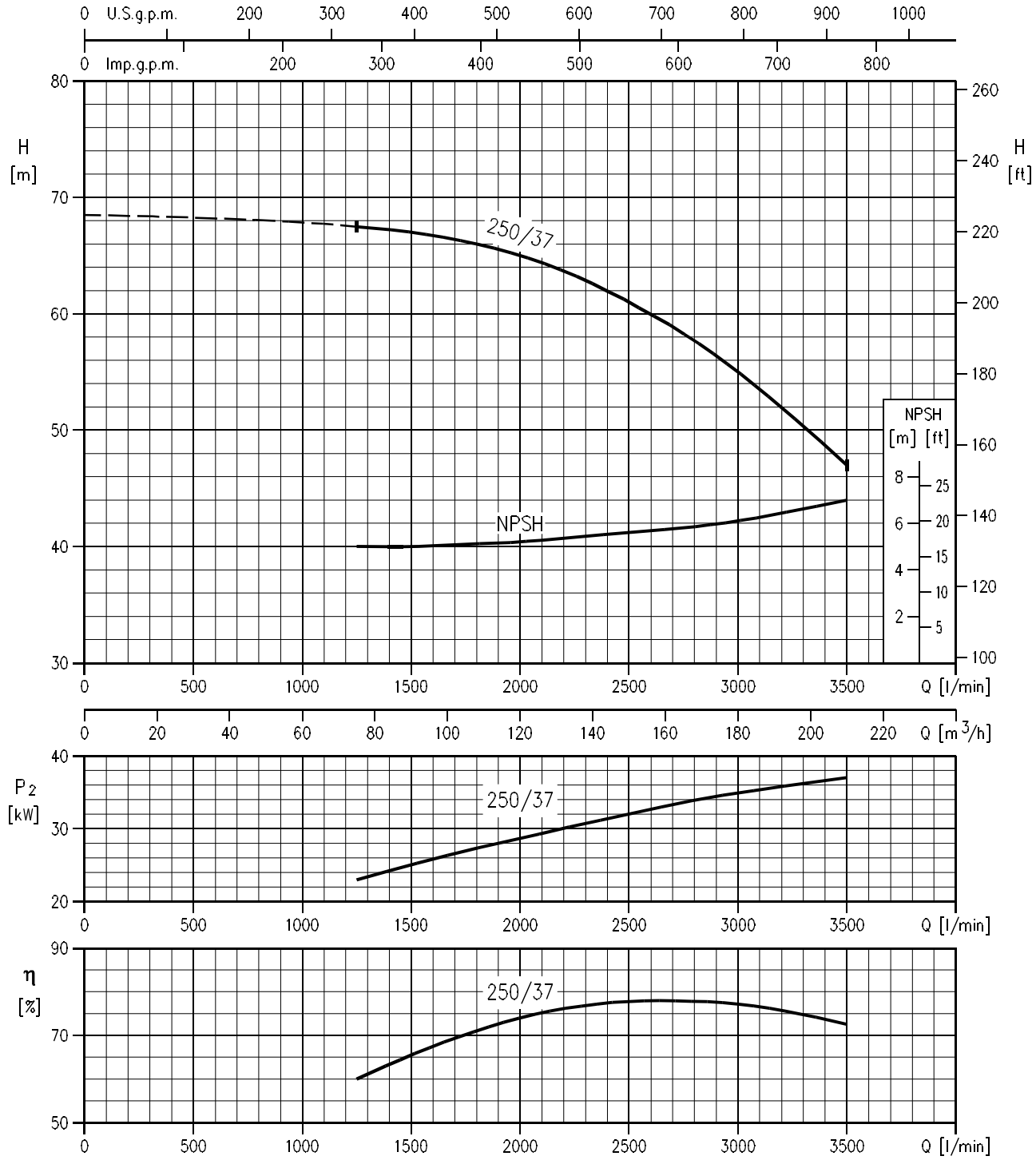

Rotation speed ≈ 2900 min^{-1}
Test standard: ISO 9906 – Annex A

PERFORMANCE CURVE

50Hz

Rev. C

MMD 100-200/22 (22 kW) MEI > 0.40 Impeller diameter = 178x27 mm
MMD 100-200/30 (30 kW) MEI > 0.40 Impeller diameter = 193x27 mm
MMD 100-200/37 (37 kW) MEI > 0.40 Impeller diameter = 203x27 mm

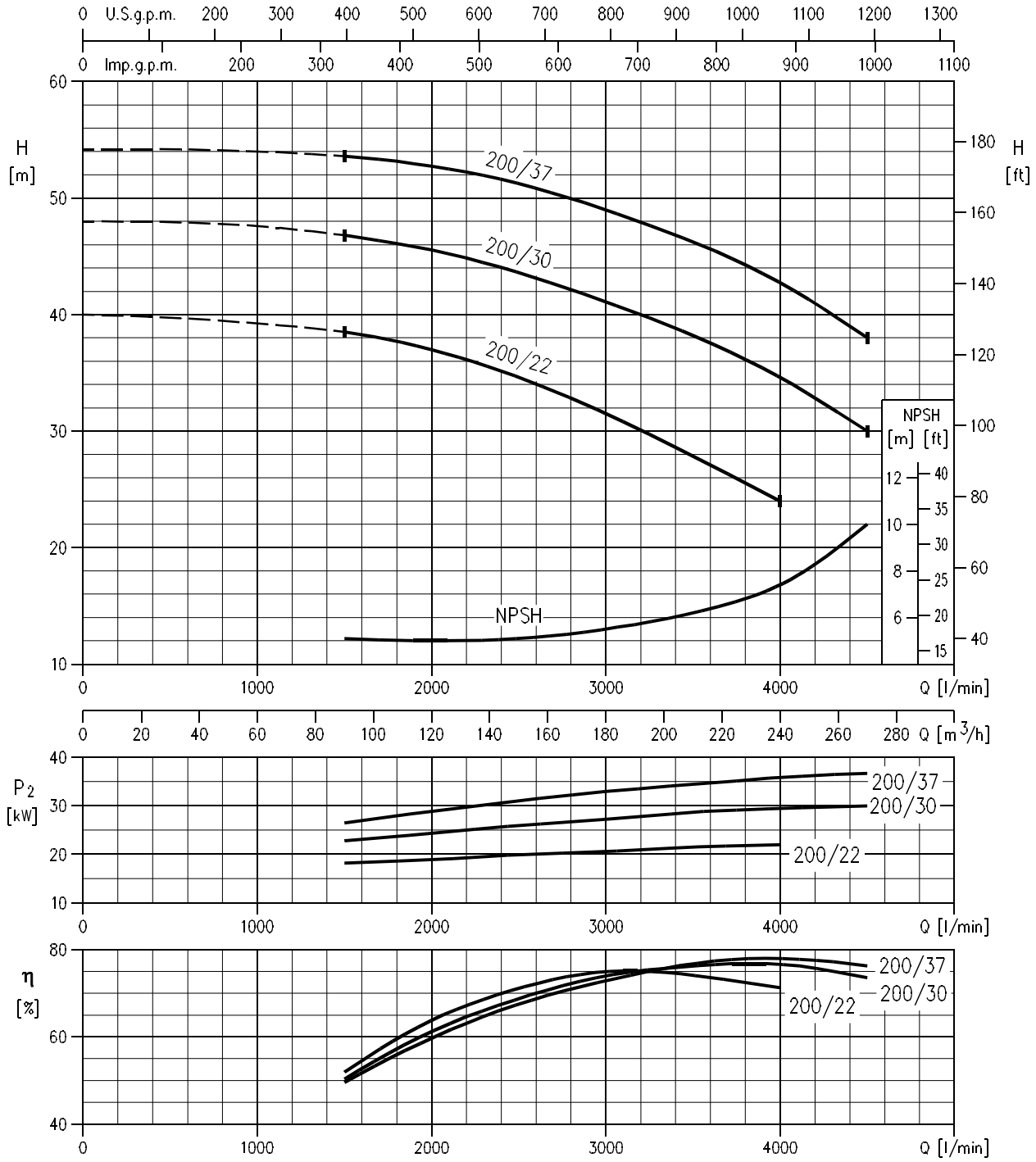

Rotation speed ≈ 2900 min
Test standard: ISO 9906 – Annex A

CONSTRUCTIONS

50Hz

Rev. C

SECTIONAL VIEW DRAWING

UP TO MEC 160

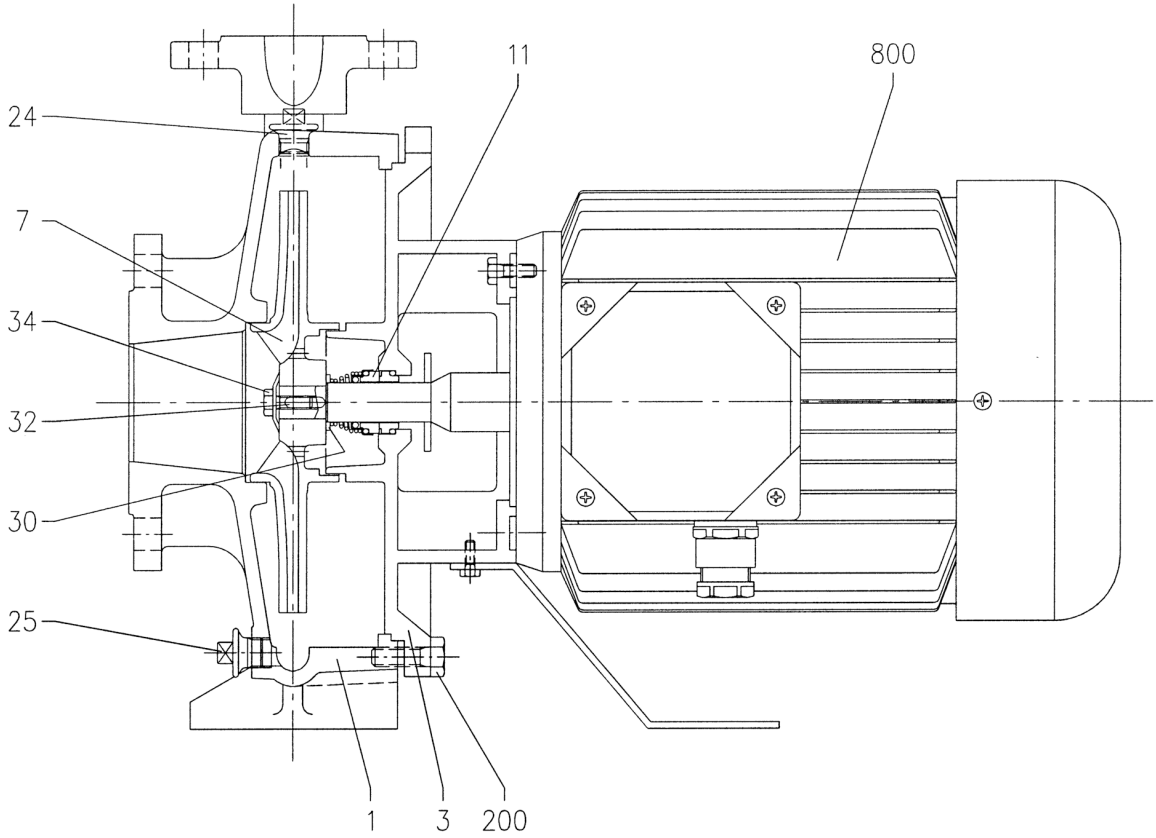

N°	PART NAME	MATERIAL
1	Casing	Cast iron
3	Motor bracket	Cast iron
7	Impeller	Cast iron
11	Mechanical seal	SiC/SiC/NBR
24	Priming plug	Stainless Steel
25	Drain plug	Stainless Steel
30	Spacer	Stainless Steel
32	Key	Stainless Steel
34	Impeller nut	Stainless Steel
200	Screw	Stainless Steel
800	Motor	aluminum (up to MEC 160)

CONSTRUCTIONS

50Hz

Rev. C

SECTIONAL VIEW DRAWING

MEC 180 AND MORE POWERFUL

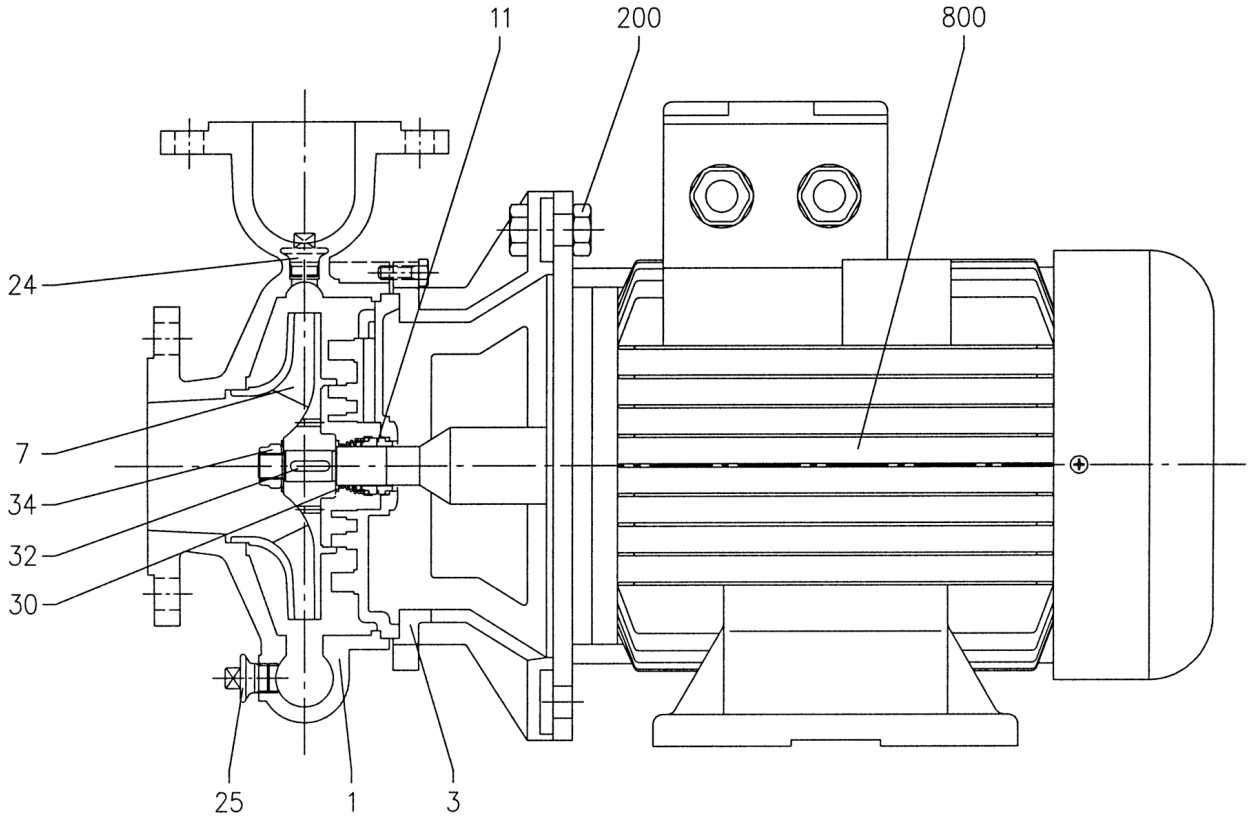

N°	PART NAME	MATERIAL
1	Casing	Cast iron
3	Motor bracket	Cast iron
7	Impeller	Cast iron
11	Mechanical seal	SiC/SiC/NBR
24	Priming plug	Stainless Steel
25	Drain plug	Stainless Steel
30	Spacer	Stainless Steel
32	Key	Stainless Steel
34	Impeller nut	Stainless Steel
200	Screw	Stainless Steel
800	Motor	Cast iron (MEC 180 and above)

MECHANICAL SEAL

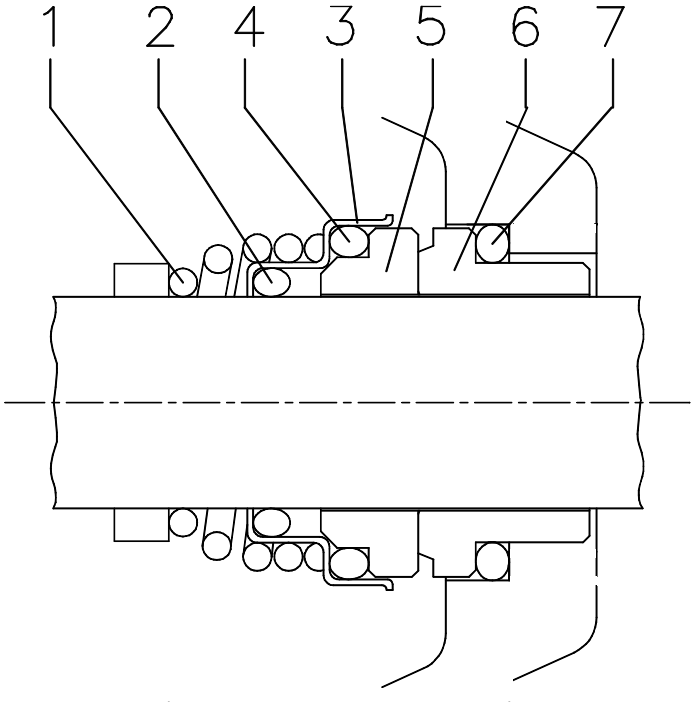

REF	PART NAME	MATERIAL (Max temperature: +90°C)
1	Self driving spring	AISI 316
2	O Ring	NBR
3	Frame	AISI 316
4	O Ring	NBR
5	Rotary seal ring	SiC
6	Stationary sealing	SiC
7	O Ring	NBR

DIMENSIONS AND WEIGHT

50Hz

Rev. C

PUMP MMD

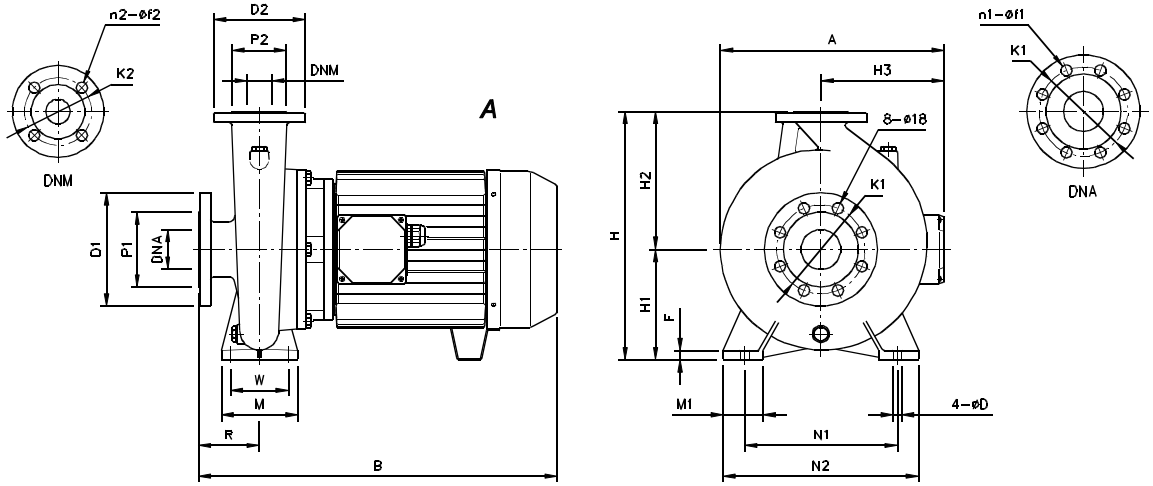

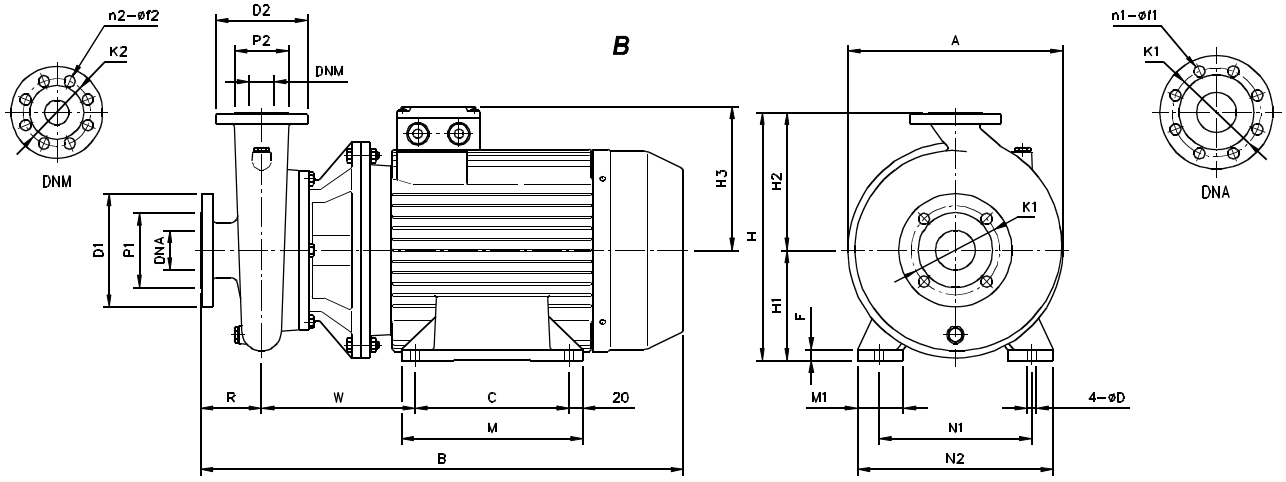

Model	Pitc.	Dimension (mm)																										Weight (kgf)
		DNA	n1	f1	P1	K1	D1	DNM	n2	f2	P2	K2	D2	H	H1	H2	H3	R	W	N1	M	N2	M1	F	A	B	C	D	
MMD 65-250/22	B	80	8	18	138	160	200	65	4	18	122	145	185	430	180	250	238	100	222	254	420	320	60	20	365	814	370	14	141
MMD 65-250/30	B	80	8	18	138	160	200	65	4	18	122	145	185	450	200	250	305	100	325	318	345	380	60	24	365	952	305	18	264
MMD 65-250/37	B	80	8	18	138	160	200	65	4	18	122	145	185	450	200	250	305	100	325	318	345	380	60	24	365	952	305	18	297
MMD 80-160/11	A	100	8	18	158	180	220	80	8	18	138	160	200	405	180	225	194	125	95	250	125	320	65	14	315	679	-	14	87
MMD 80-160/15R	A	100	8	18	158	180	220	80	8	18	138	160	200	405	180	225	194	125	95	250	125	320	65	14	315	730	-	14	90
MMD 80-160/15	A	100	8	18	158	180	220	80	8	18	138	160	200	405	180	225	194	125	95	250	125	320	65	14	315	730	-	14	90
MMD 80-200/18,5	B	100	8	18	158	180	220	80	8	18	138	160	200	430	180	250	238	125	222	254	420	320	60	20	360	839	370	14	137
MMD 80-200/22	B	100	8	18	158	180	220	80	8	18	138	160	200	430	180	250	238	125	222	254	420	320	60	20	360	839	370	14	147
MMD 80-200/30	B	100	8	18	158	180	220	80	8	18	138	160	200	450	200	250	305	125	325	318	345	380	60	24	400	977	305	18	284
MMD 80-200/37	B	100	8	18	158	180	220	80	8	18	138	160	200	450	200	250	305	125	325	318	345	380	60	24	400	977	305	18	317
MMD 80-250/37	B	100	8	18	158	180	220	80	8	18	138	160	200	480	200	280	305	125	325	318	345	380	60	24	400	977	305	18	320
MMD 100-200/22	B	125	8	18	188	210	250	100	8	18	158	180	220	460	180	280	238	125	222	254	420	320	60	20	380	839	370	14	157
MMD 100-200/30	B	125	8	18	188	210	250	100	8	18	158	180	220	480	200	280	305	125	325	318	345	380	60	24	400	977	305	18	294
MMD 100-200/37	B	125	8	18	188	210	250	100	8	18	158	180	220	480	200	280	305	125	325	318	345	380	60	24	400	977	305	18	327

TECHNICAL DATA

50Hz

Rev. C

MOTOR DATA

Pump type Three Phase	Power [kW]	Power [HP]	Efficiency	Input [kW]	Efficiency (% load) and power-factor η % 50%	75%	100%	cos−ϕ	Full load current [A] 230 V	400 V	690 V	Locked rotor current [A] 230 V	400 V	690 V
MMD 65-250/22	22	30	IE3	23,75	92,2	93,7	92,7	0,87	-	39,4	22,5	-	409,8	236,6
MMD 65-250/30	30	40	IE3	32,12	91,4	93,3	93,3	0,89	-	52,1	30,0	-	390,8	225,6
MMD 65-250/37	37	50	IE3	39,47	91,8	93,7	93,7	0,91	-	62,6	36,0	-	469,5	271,1
MMD 80-160/11	11	15	IE3	12,27	90,0	90,8	91,2	0,89	-	19,9	11,5	-	193,0	111,4
MMD 80-160/15R	15	20	IE3	16,33	91,0	92,2	91,9	0,88	-	26,8	15,5	-	257,3	148,5
MMD 80-160/15	15	20	IE3	16,33	91,0	92,2	91,9	0,88	-	26,8	15,5	-	257,3	148,5
MMD 80-200/18,5	18,5	25	IE3	20,12	91,6	92,8	92,4	0,88	-	33,0	19,0	-	353,1	203,9
MMD 80-200/22	22	30	IE3	23,75	92,2	93,7	92,7	0,87	-	39,4	22,5	-	409,8	236,6
MMD 80-200/30	30	40	IE3	32,12	91,4	93,3	93,3	0,89	-	52,1	30,0	-	390,8	225,6
MMD 80-200/37	37	50	IE3	39,47	91,8	93,7	93,7	0,91	-	62,6	36,0	-	469,5	271,1
MMD 80-250/37	37	50	IE3	39,47	91,8	93,7	93,7	0,91	-	62,6	36,0	-	469,5	271,1
MMD 100-200/22	22	30	IE3	23,75	92,2	93,7	92,7	0,87	-	39,4	22,5	-	409,8	236,6
MMD 100-200/30	30	40	IE3	32,12	91,4	93,3	93,3	0,89	-	52,1	30,0	-	390,8	225,6
MMD 100-200/37	37	50	IE3	39,47	91,8	93,7	93,7	0,91	-	62,6	36,0	-	469,5	271,1

NOISE DATA

Pump type Three Phase	Power [kW]	Power [HP]	L_{pA} - dB(A) *
MMD 65-250/22	22	30	81
MMD 65-250/30	30	40	83
MMD 65-250/37	37	50	
MMD 80-160/11	11	15	80
MMD 80-160/15R	15	20	
MMD 80-160/15	15	20	
MMD 80-200/18,5	18,5	25	81
MMD 80-200/22	22	30	
MMD 80-200/30	30	40	83
MMD 80-200/37	37	50	
MMD 80-250/37	37	50	
MMD 100-200/22	22	30	81
MMD 100-200/30	30	40	83
MMD 100-200/37	37	50	

* Mean value of several measures at 1m distance around the pump. Tollerance ± 2.5 dB.